swiss bed concept

MONTAGEANLEITUNG
NOTICE DE MONTAGE
ASSEMBLY INSTRUCTION
ISTRUZIONE DI MONTAGGIO

HASENA
the dream factory

Galante

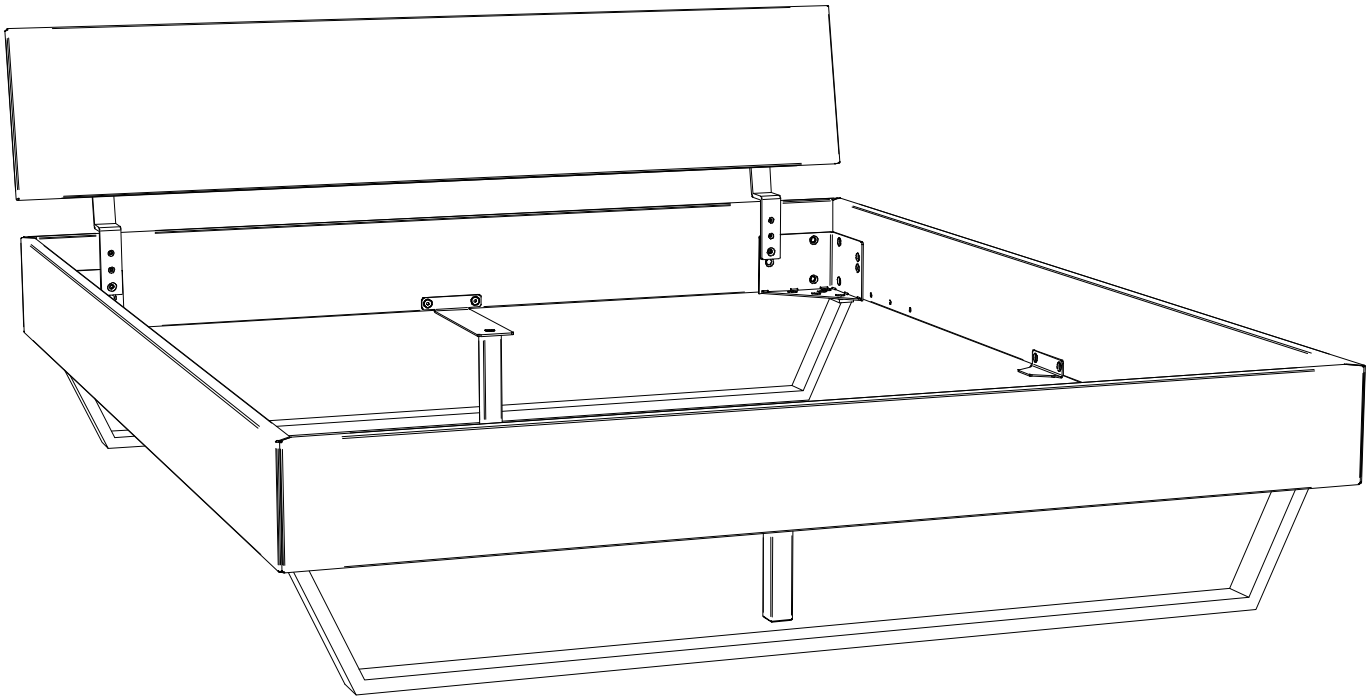

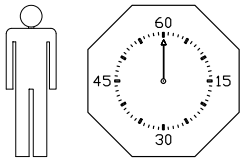

19.05.2026

660.01474

A ×2	B ×2	C ×4	D ×28
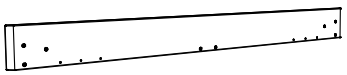		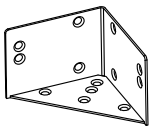 630.10142	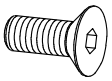 631.87200

E ×2	Z ×1
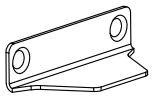 630.09942	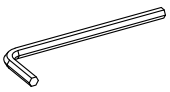 631.10000

1.

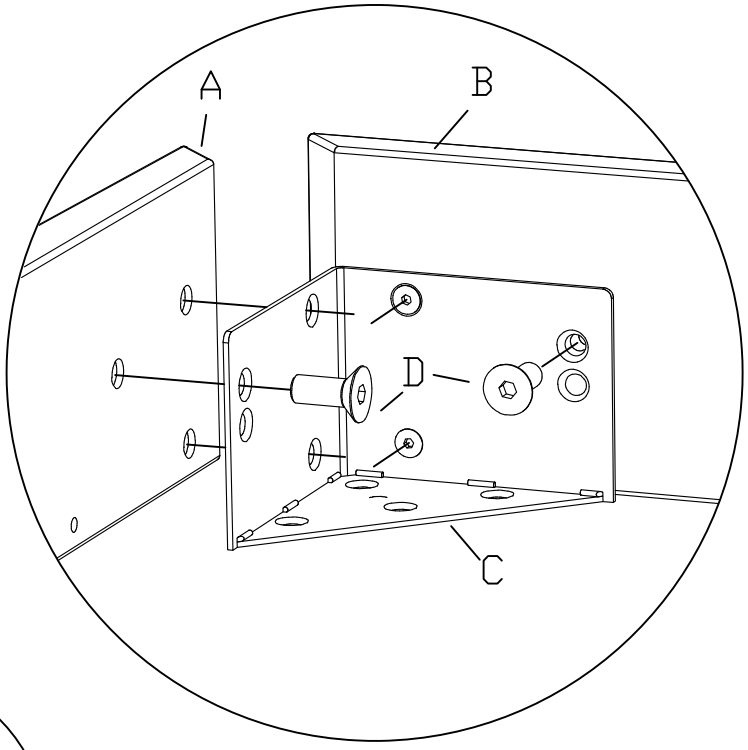

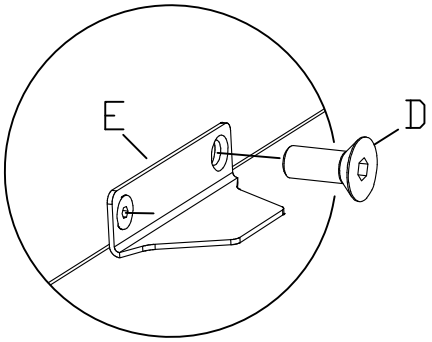

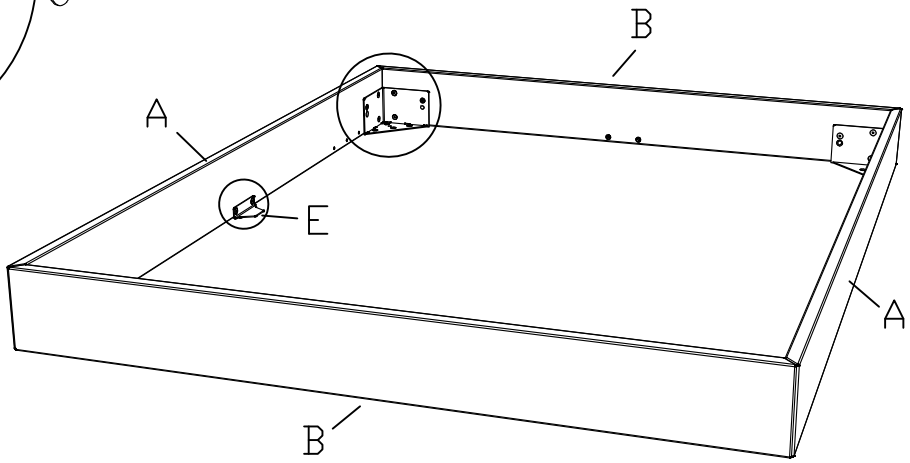

660.01474

G x2

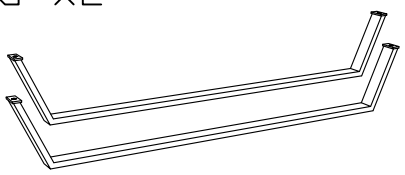

D x4

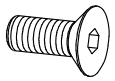

631.872

2.

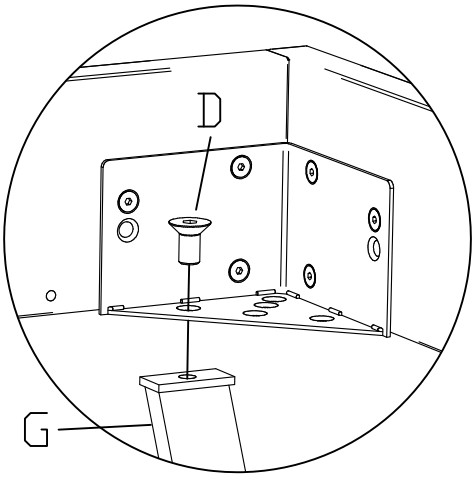

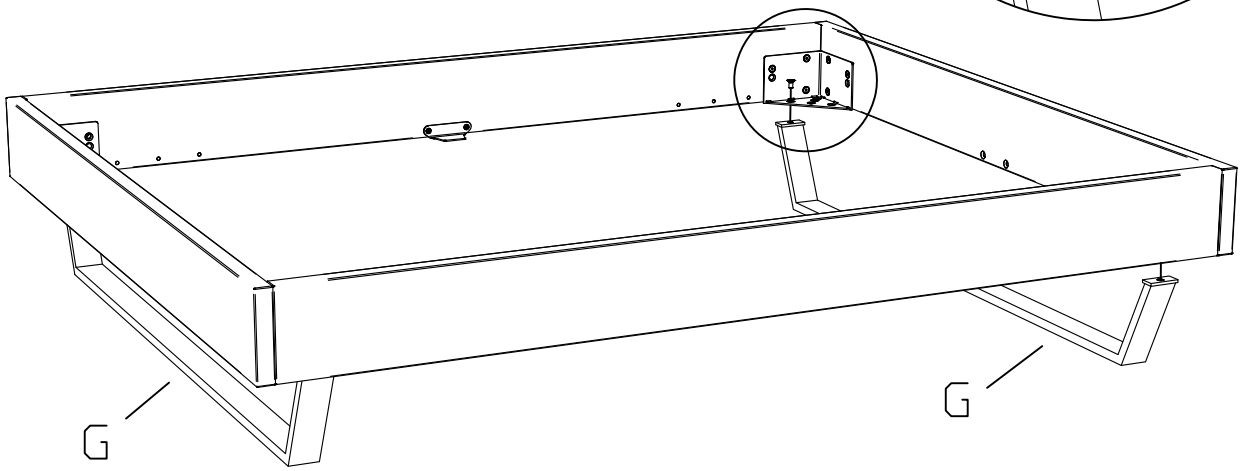

zusätzlich bei Breiten ab 160cm
additional for widths from 160cm
à partir des dimensions 160cm
a partire della misura 160cm

H x2

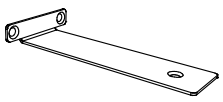

790.023

I x2

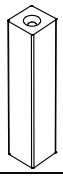

D x6

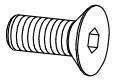

631.872

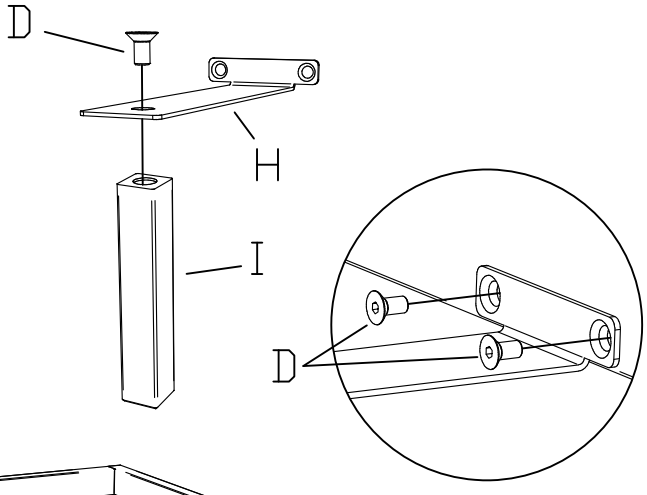

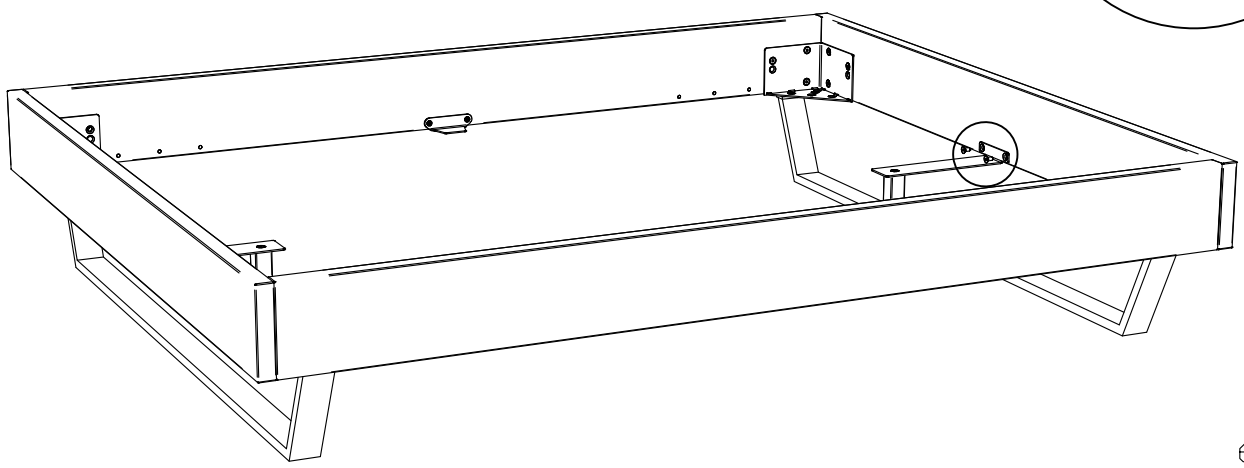

660.01474

zusätzlich bei Fusshöhe 25cm
additional for feed height 25cm
en plus pour les hauteur de pieds 25cm
supporti addizionali per piedi di 25cm

H ×2	I ×2	D ×6	J ×2
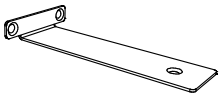 790.023	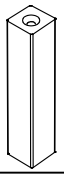	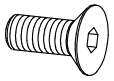 631.872	 793.290

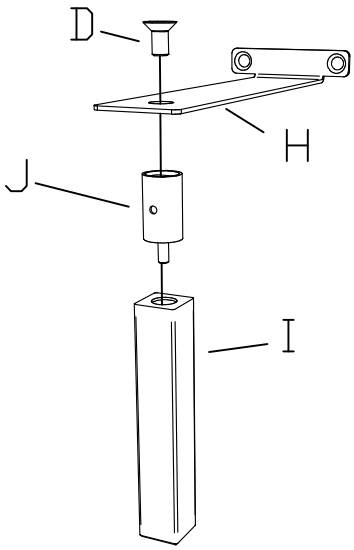

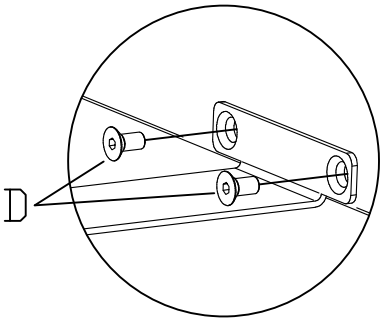

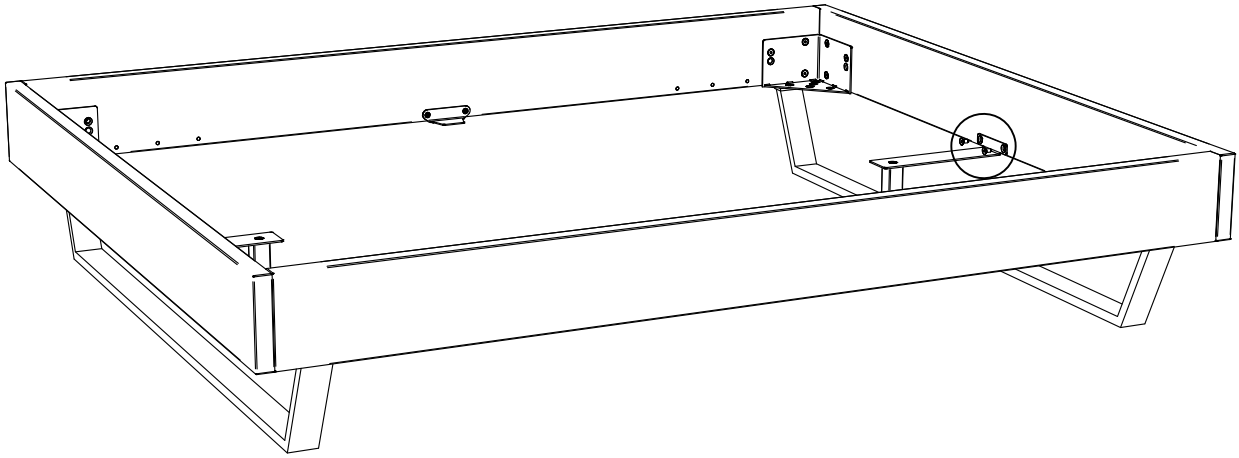

660.01474

K x1

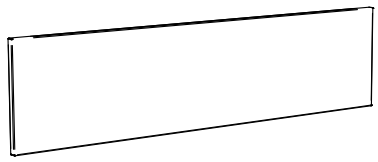

L x2

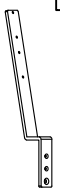

790.006

M x4
Ø5x25

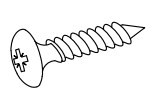

631.16500

□ x2
M8x25

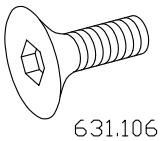

631.10600

P x2
Ø5x25

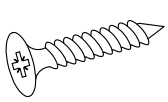

631.32100

R x2

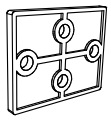

630.767

3, Variante 2

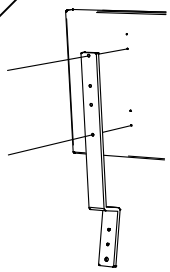

oder / or / ou

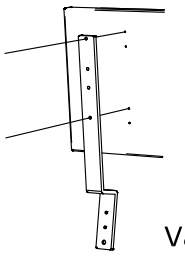

Variante 1

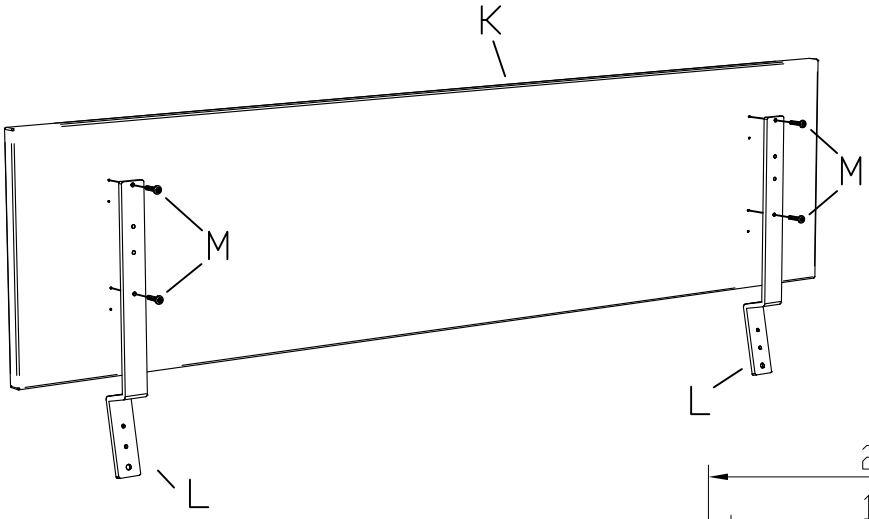

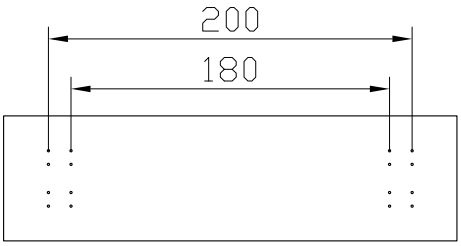

4,

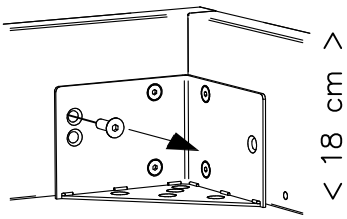

5,

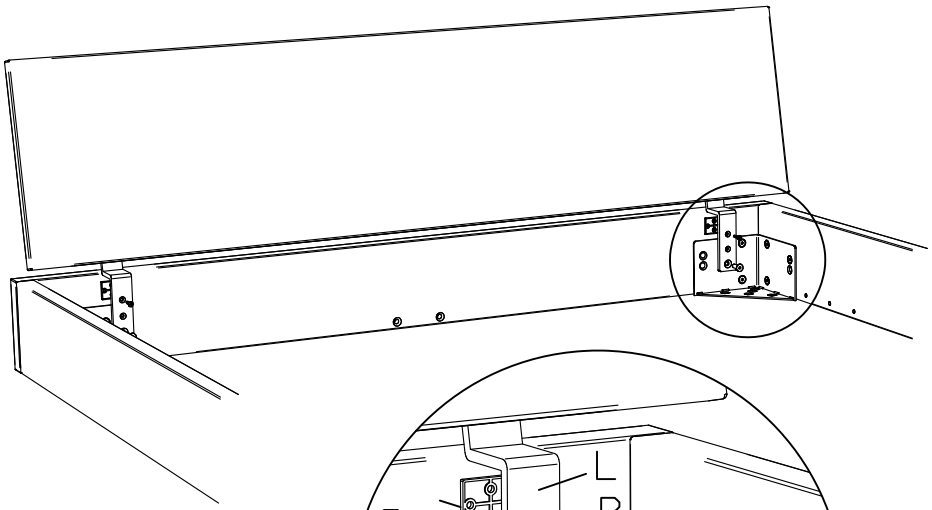

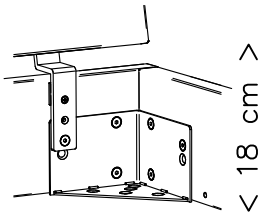

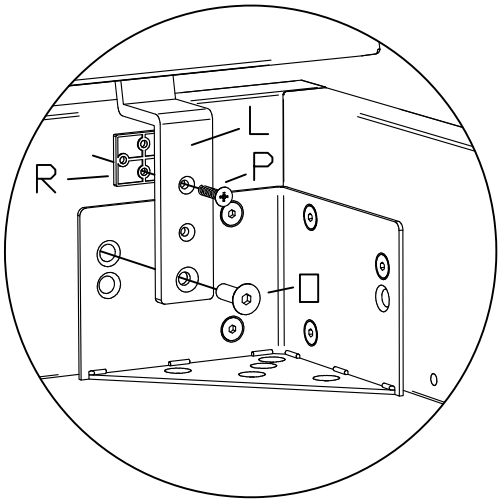

660.01474