swiss bed concept

MONTAGEANLEITUNG
NOTICE DE MONTAGE
ASSEMBLY INSTRUCTION
ISTRUZIONE DI MONTAGGIO

HASENA
the dream factory

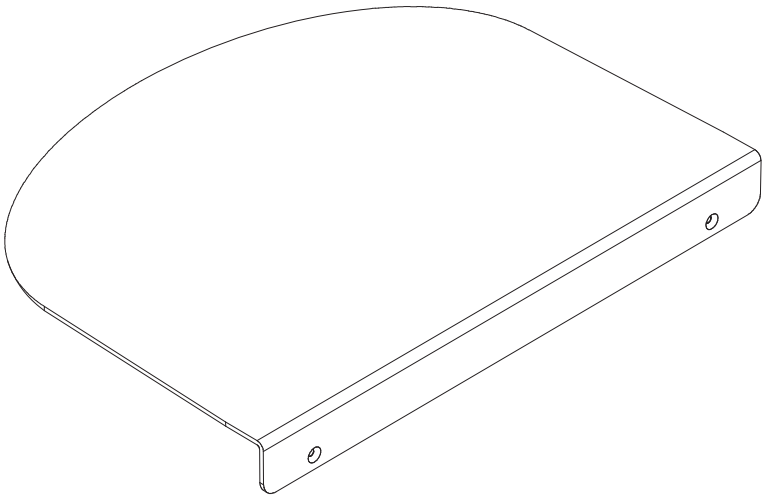

Benötigte Werkzeuge – Outils Nécessaires – Tools Required – Attrezzi Necessari

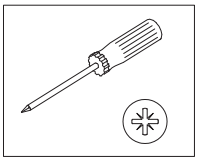

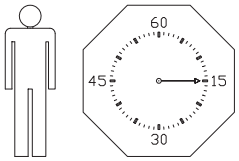

19.03.2026

660.01461

A ×1

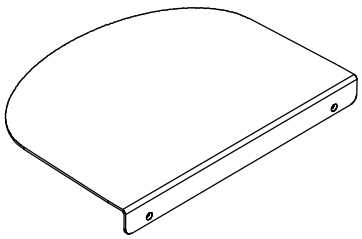

B ×4

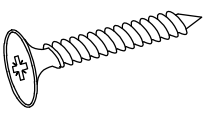

631.133

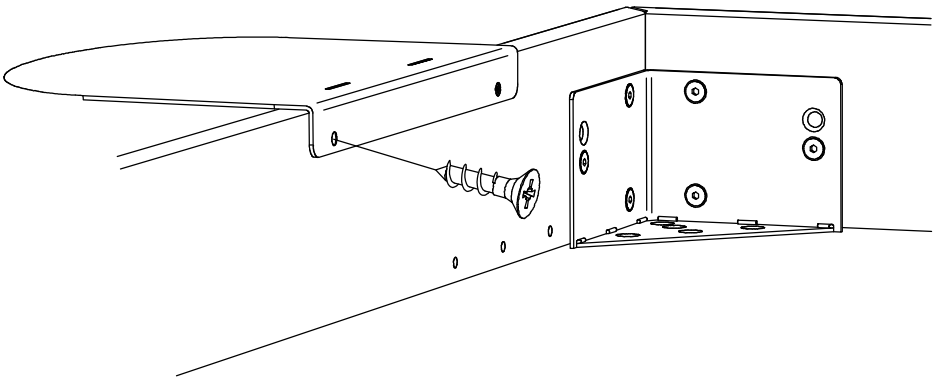

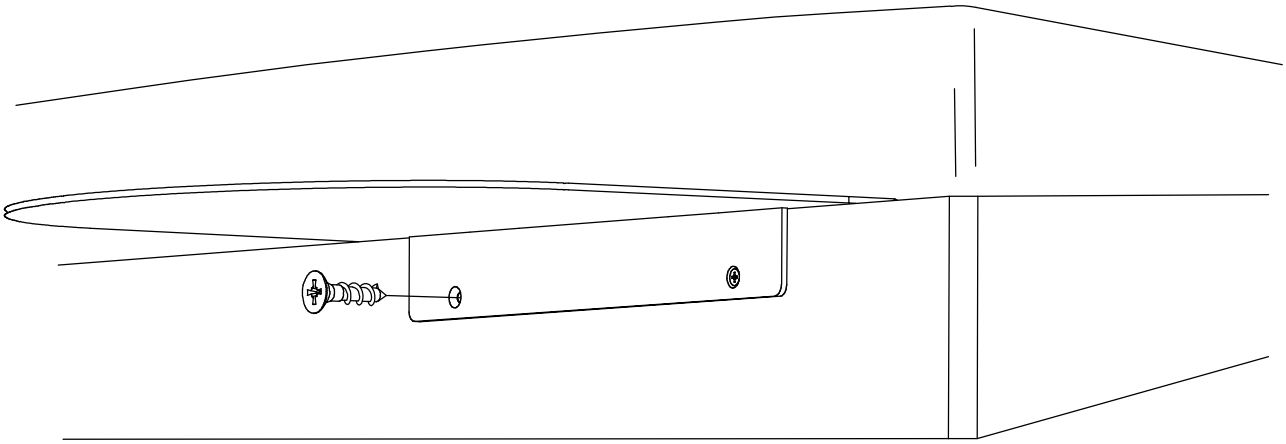

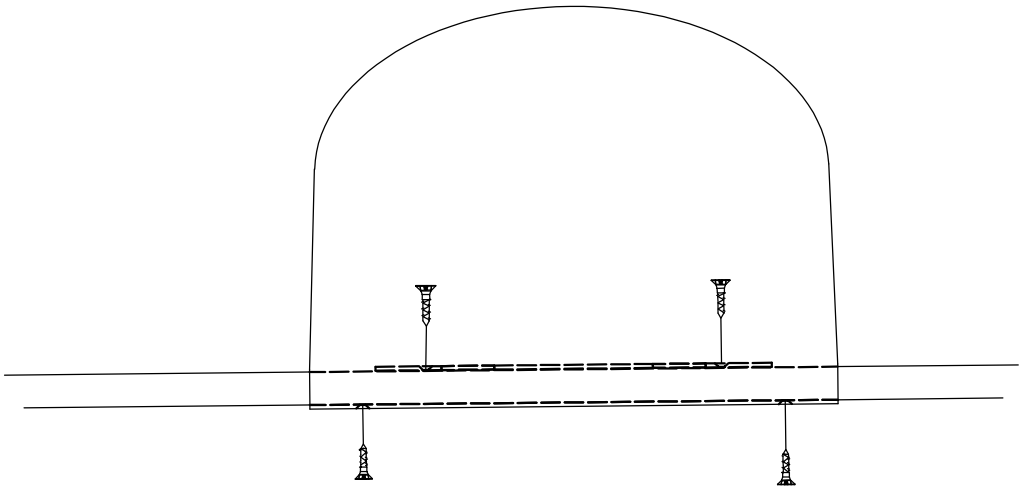

660.01461