swiss bed concept

MONTAGEANLEITUNG
NOTICE DE MONTAGE
ASSEMBLY INSTRUCTION
ISTRUZIONE DI MONTAGGIO

HASENA
the dream factory

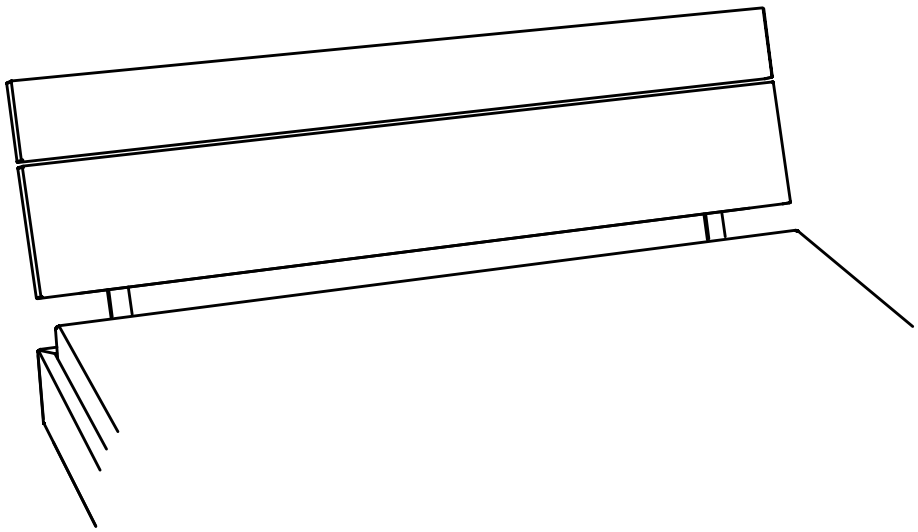

Benötigte Werkzeuge – Outils Nécessaires – Tools Required – Attrezzi Necessari

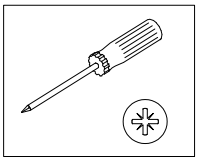

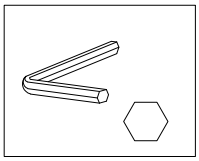

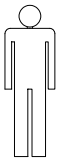

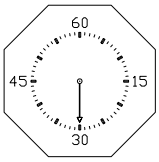

27.03.2026

660.01446

AA ×1  2509	AB ×1  2510	B ×2  790.006	C×4 Ø5×25 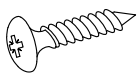 631.16500	
D ×2 M8×25 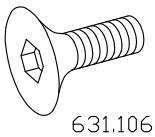 631.10600	E ×2 Ø5×25 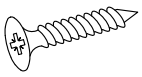 631.32100	F ×2 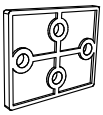 630.767	G ×2 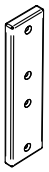 2503	H ×8 Ø4×30 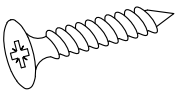 631.32000

1.

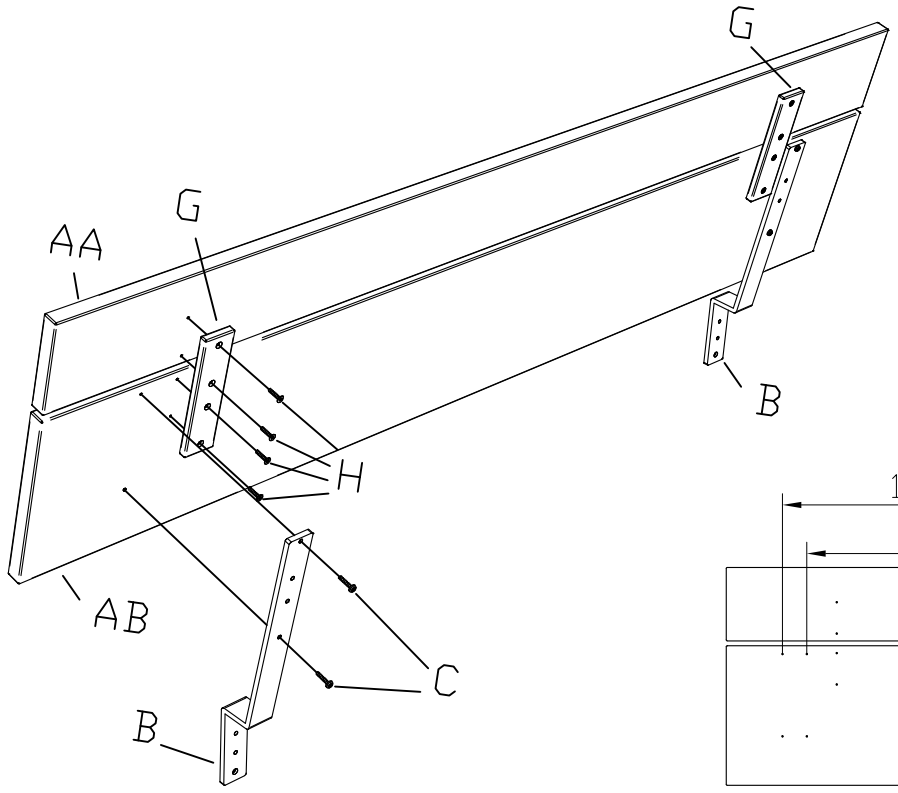

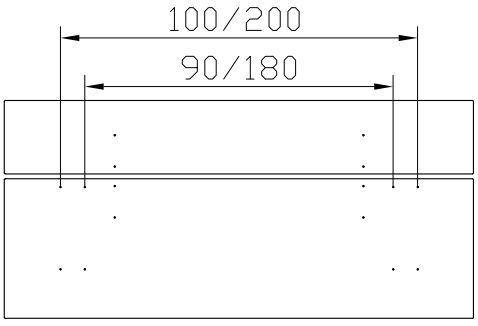

2.

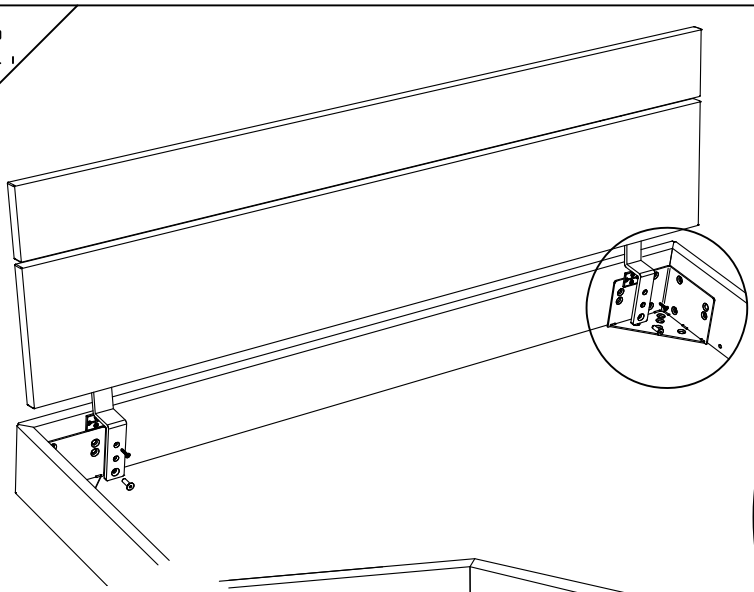

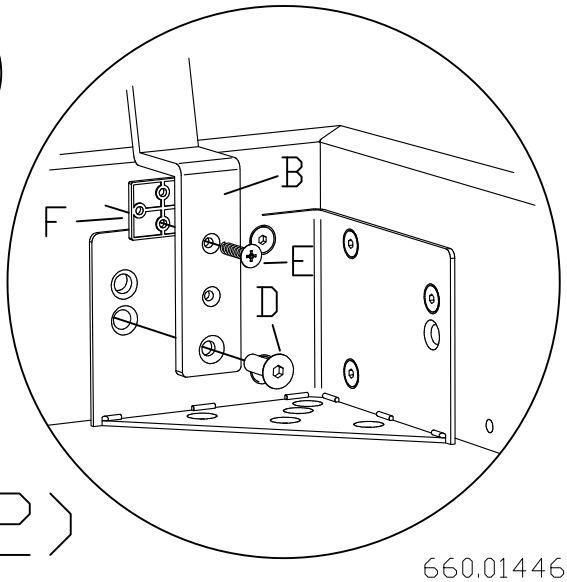

(1)

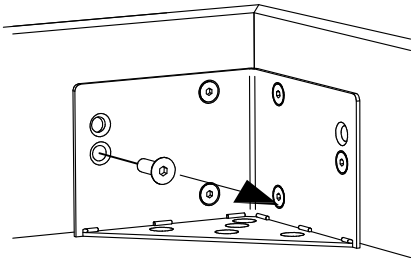

(2)

660.01446