swiss bed concept

MONTAGEANLEITUNG
NOTICE DE MONTAGE
ASSEMBLY INSTRUCTION
ISTRUZIONE DI MONTAGGIO

HASENA
the dream factory

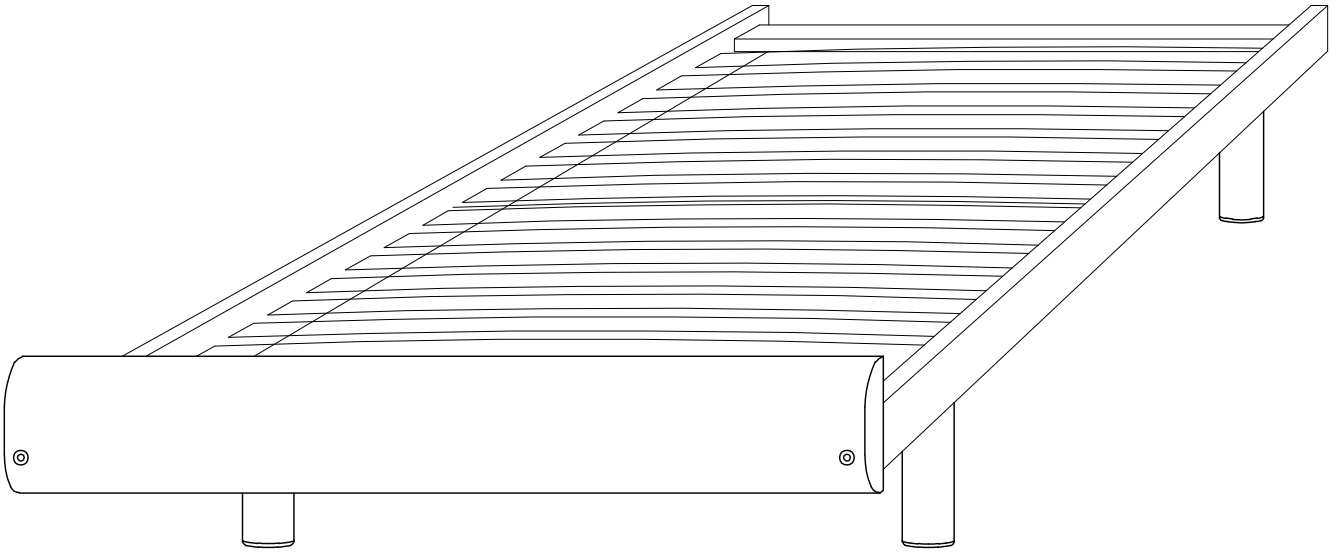

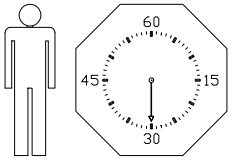

A ×1



B ×2

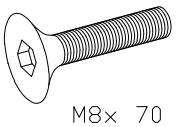

M8× 70

631.10400

C ×2



631.61100

D ×4



E ×4

M8× 40

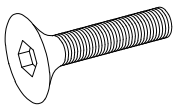

631.877

Z ×1

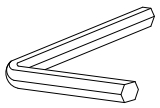

631.10000

1.

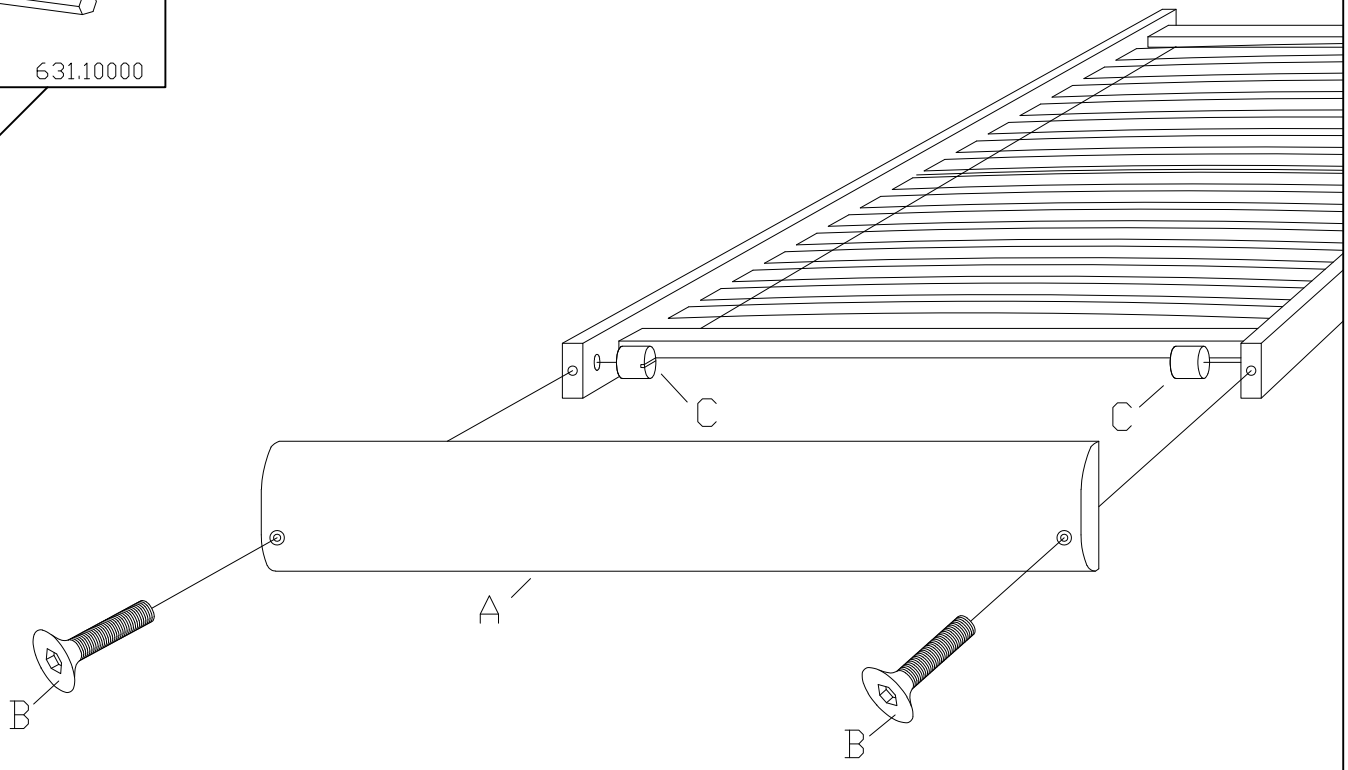

2.

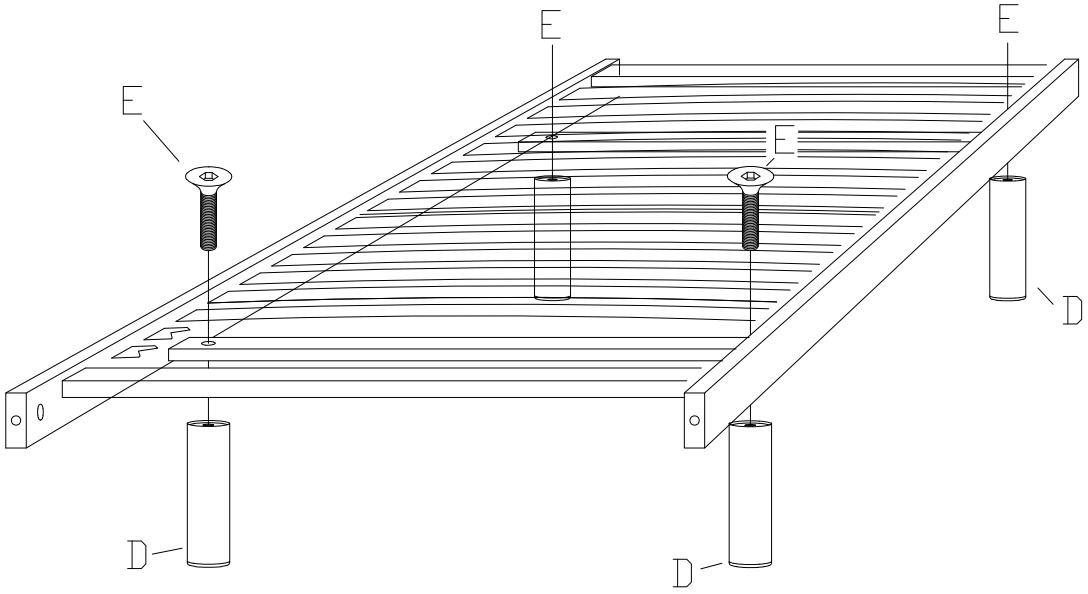

660.01261