swiss bed concept

MONTAGEANLEITUNG
NOTICE DE MONTAGE
ASSEMBLY INSTRUCTION
ISTRUZIONE DI MONTAGGIO

HASENA
the dream factory

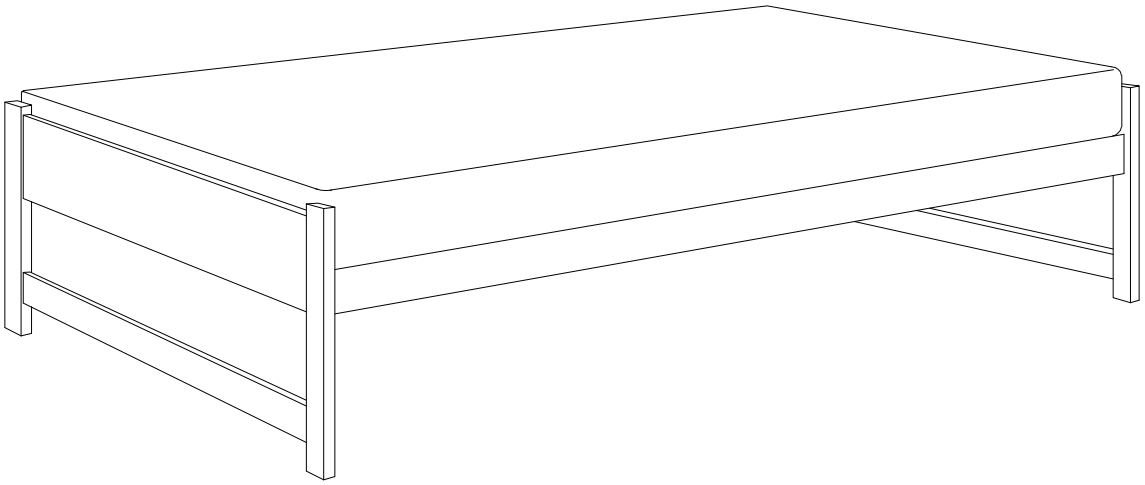

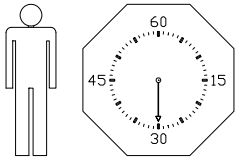

22.10.2019

660.00294

A x2

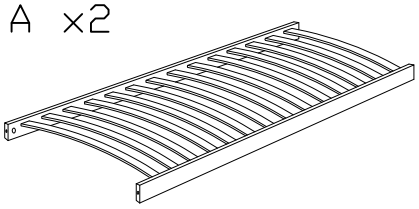

B x2

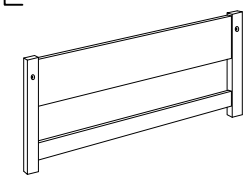

D X4

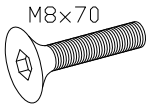

631.104

E X4



631.611

F X4

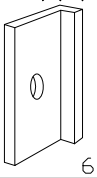

630.267

G X4



630.204

H X1

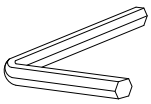

631.100

1

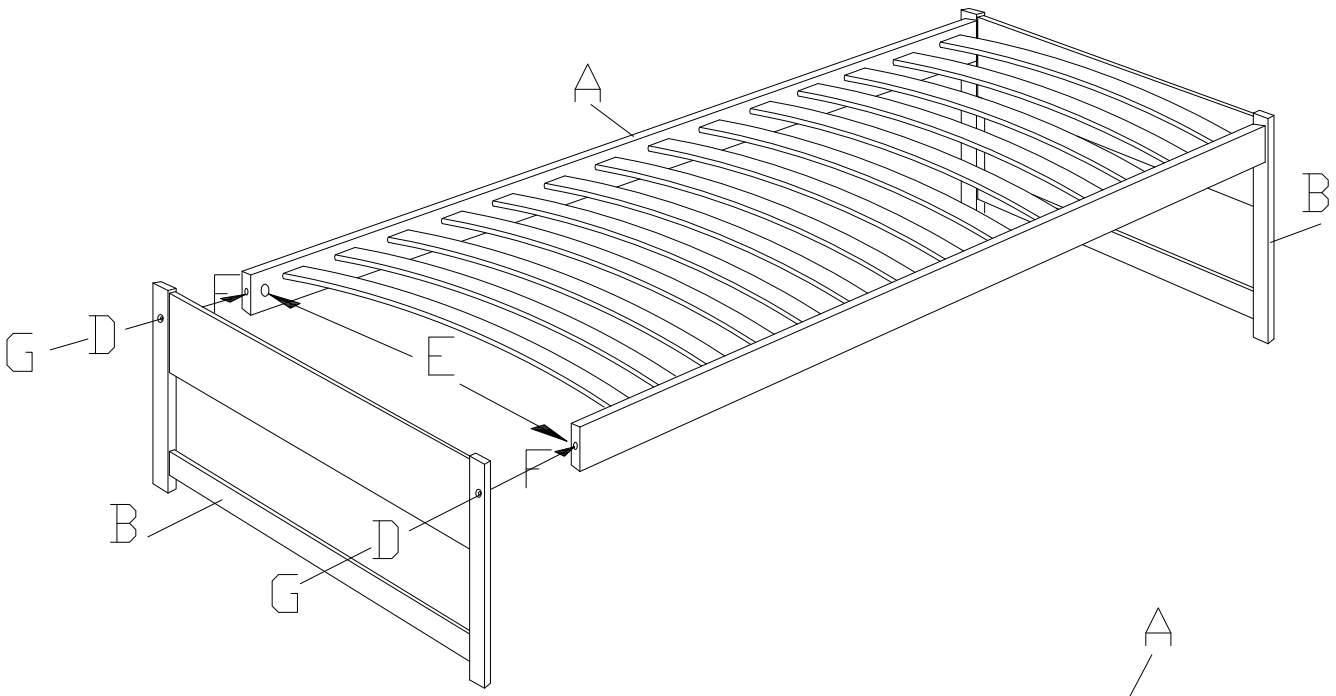

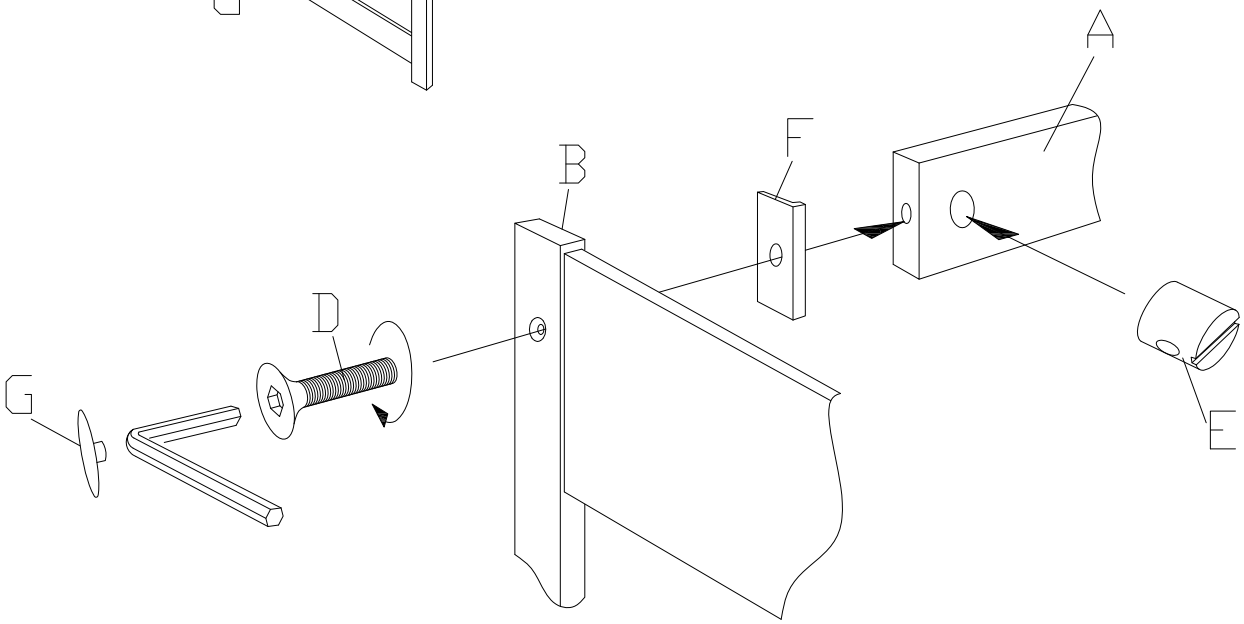

660.00294