swiss bed concept

MONTAGEANLEITUNG
NOTICE DE MONTAGE
ASSEMBLY INSTRUCTION
ISTRUZIONE DI MONTAGGIO

HASENA
the dream factory

Juliano

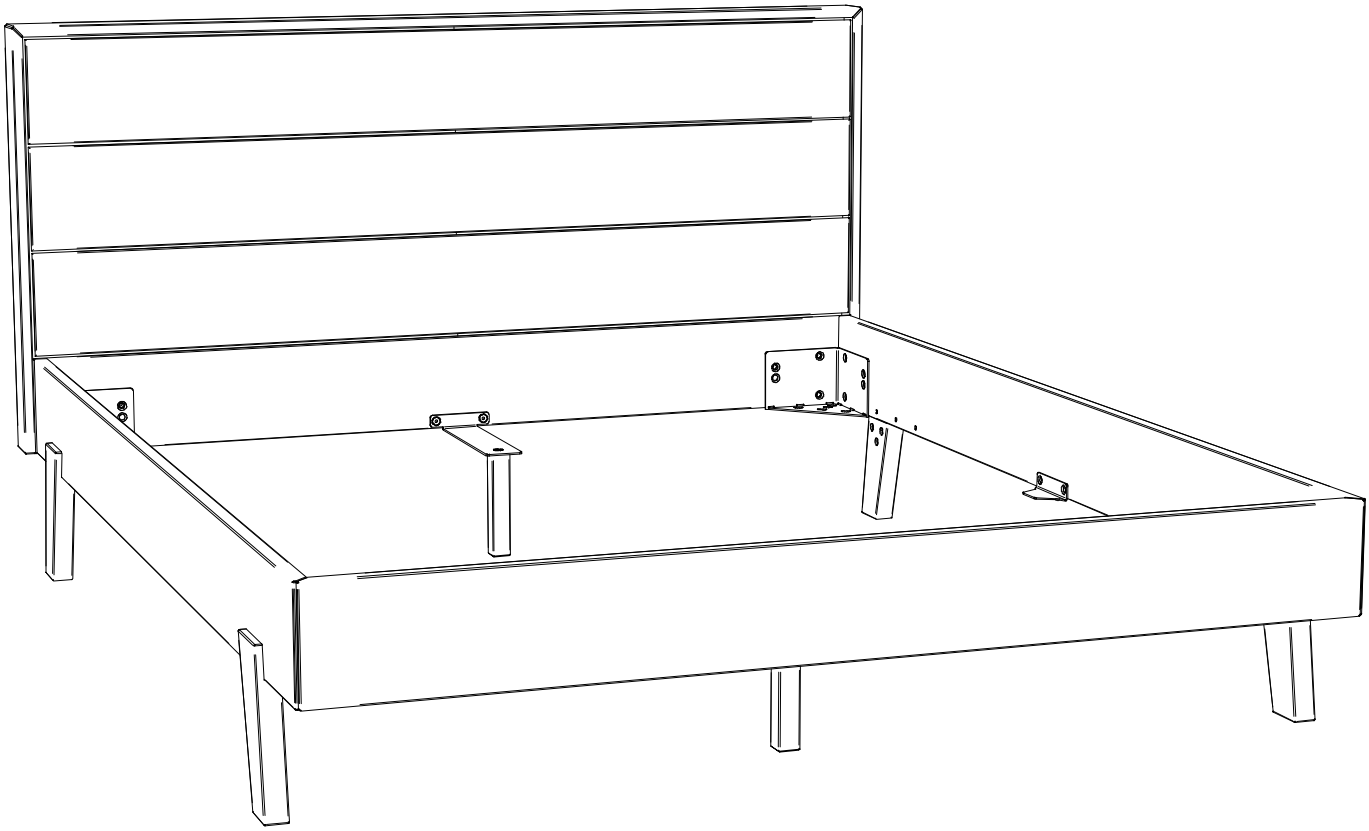

Benötigte Werkzeuge – Outils Nécessaires – Tools Required – Attrezzi Necessari

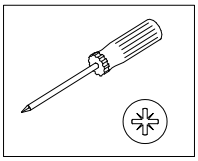

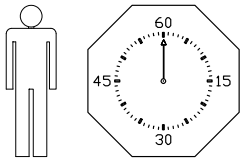

21.05.2026

660.01507

A ×1

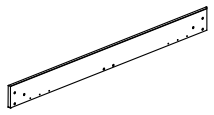

749.713

B ×1

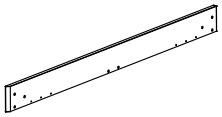

749.712

C ×1

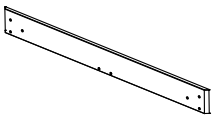

749.366-.368

D ×1

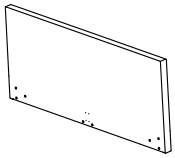

E ×4

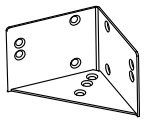

630.101

F ×28

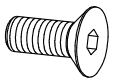

631.872

G ×2

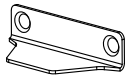

630.099

Z ×1



631.10000

1.

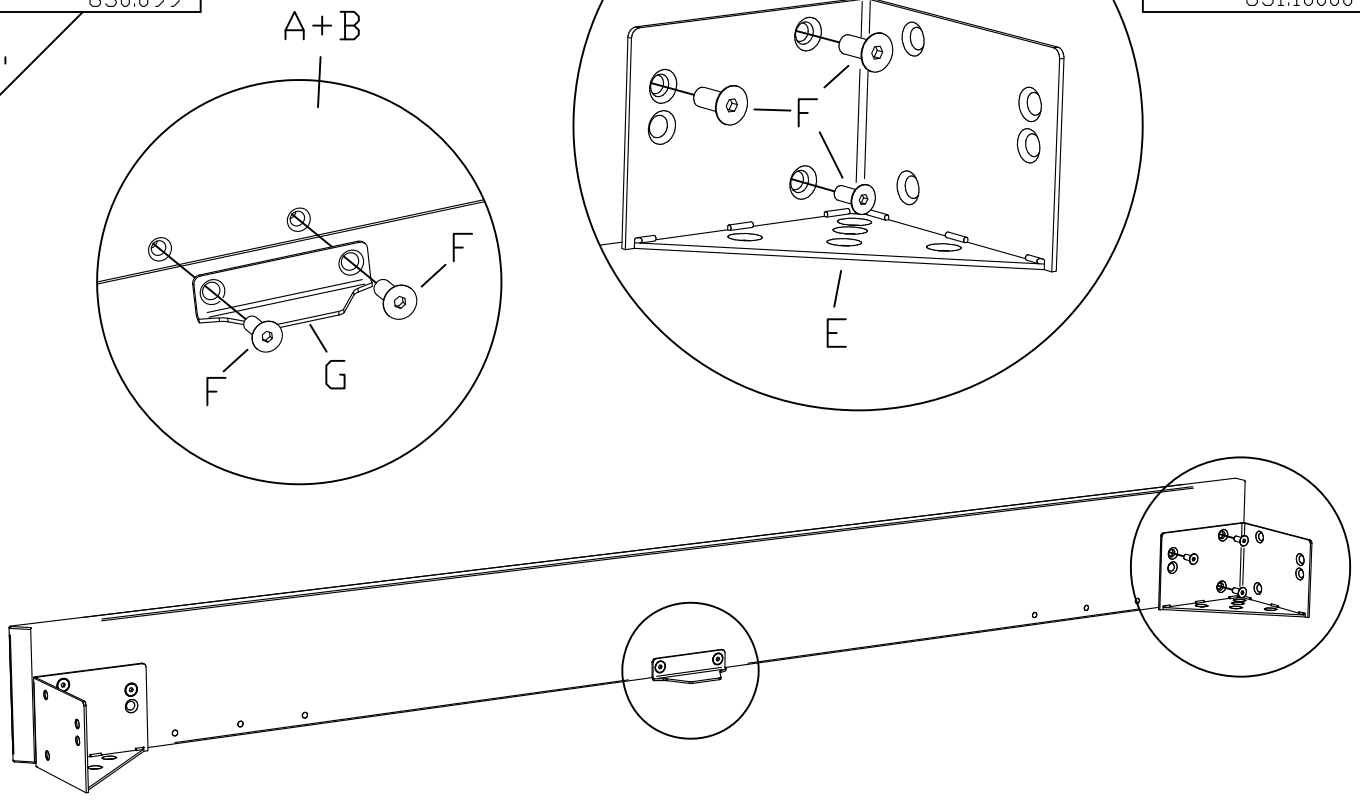

2.

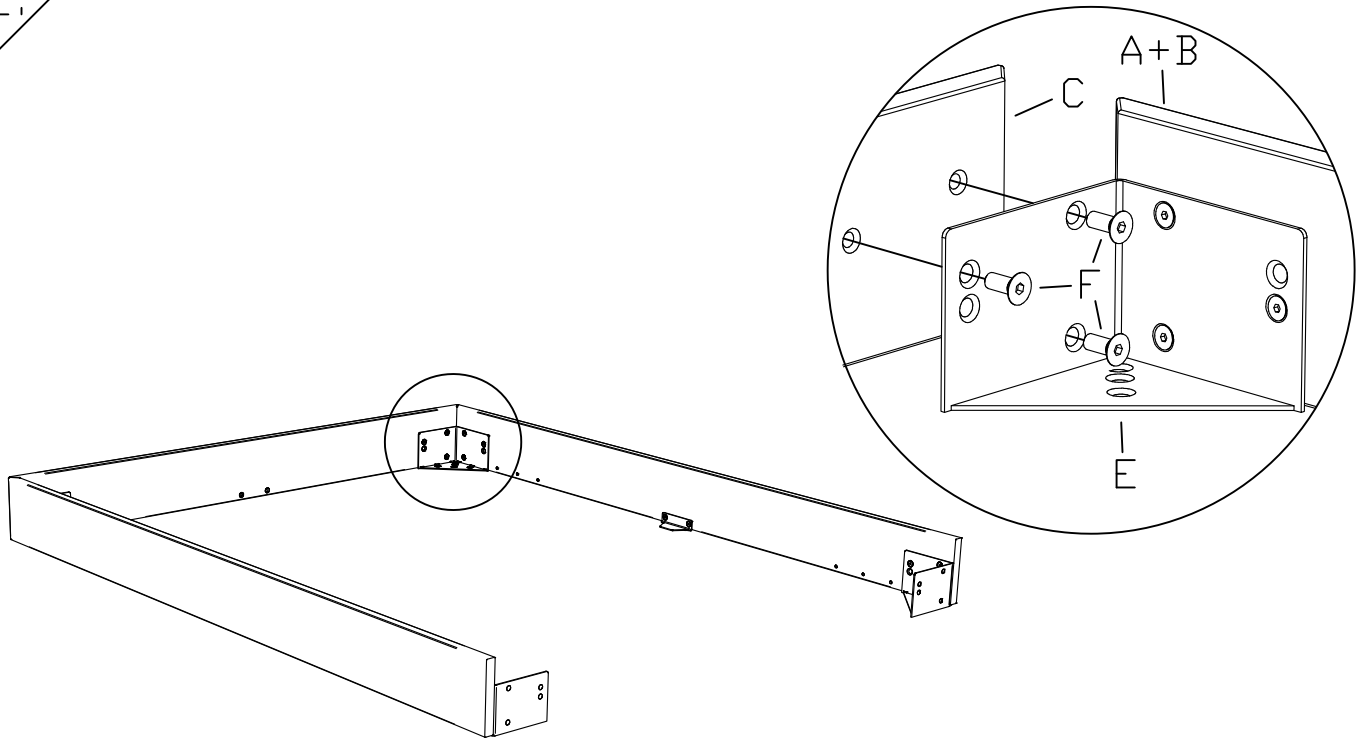

660.01507

3.

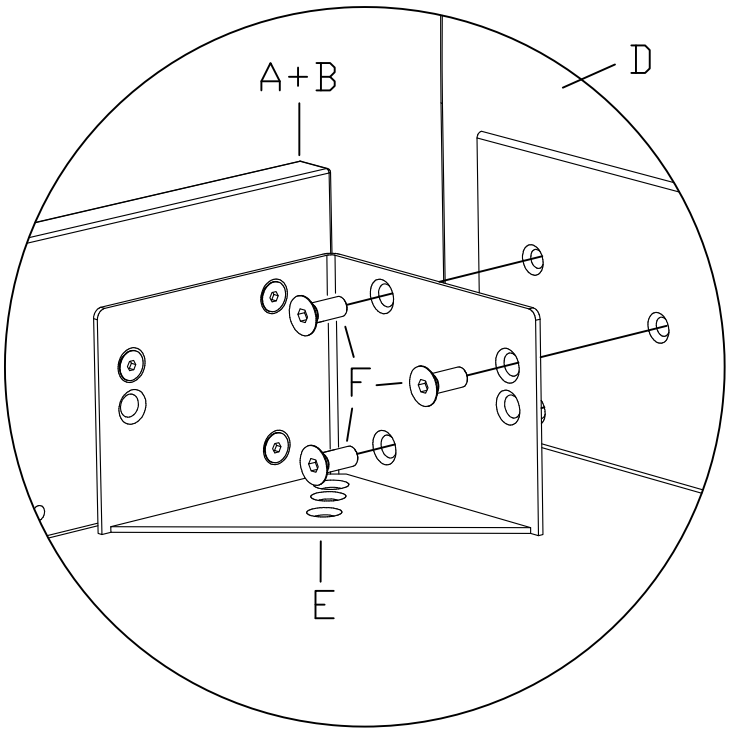

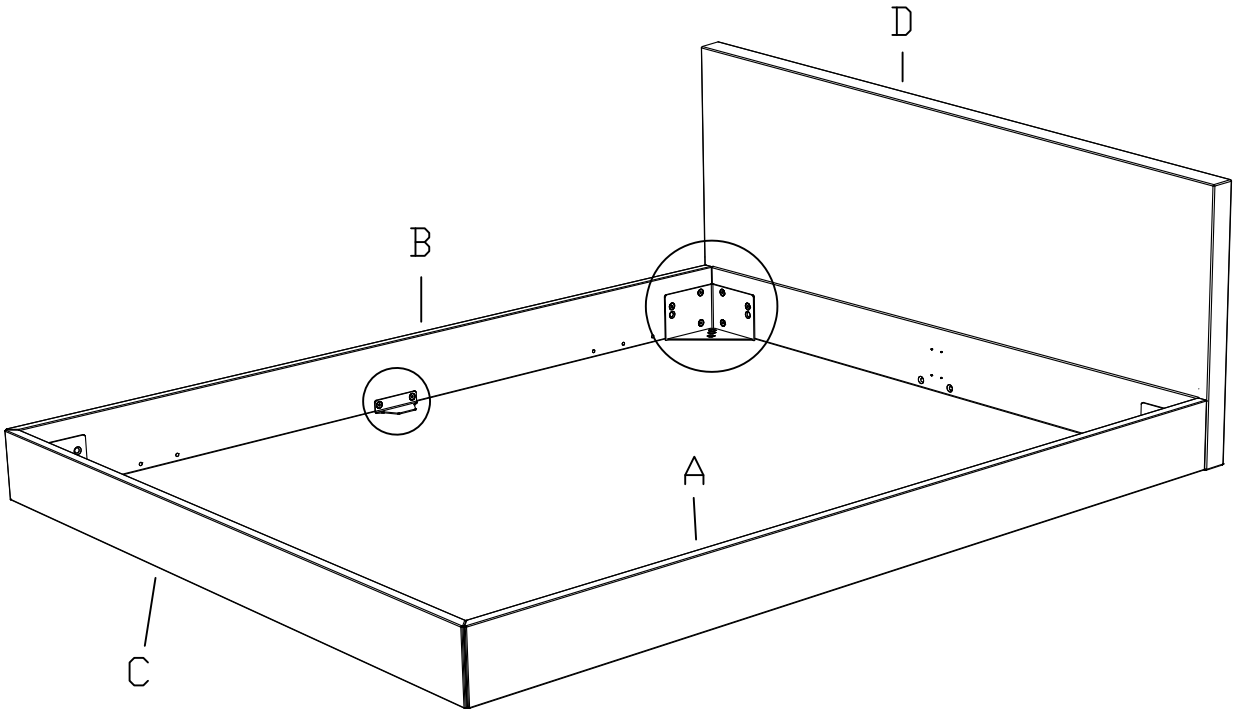

H x2	I x2	K x4	F x12	L x4	M x8
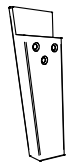	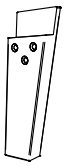	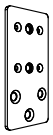 630.129	M8x20 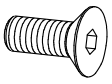 631.872	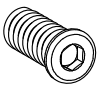 631.601	Ø4x25  631.246

4.

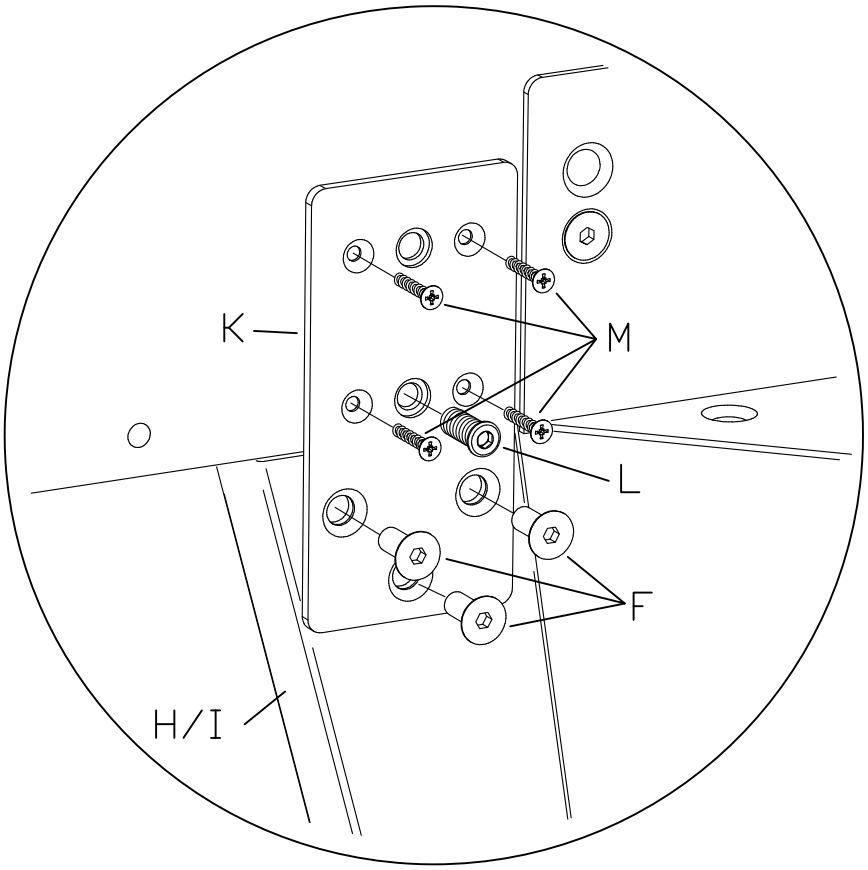

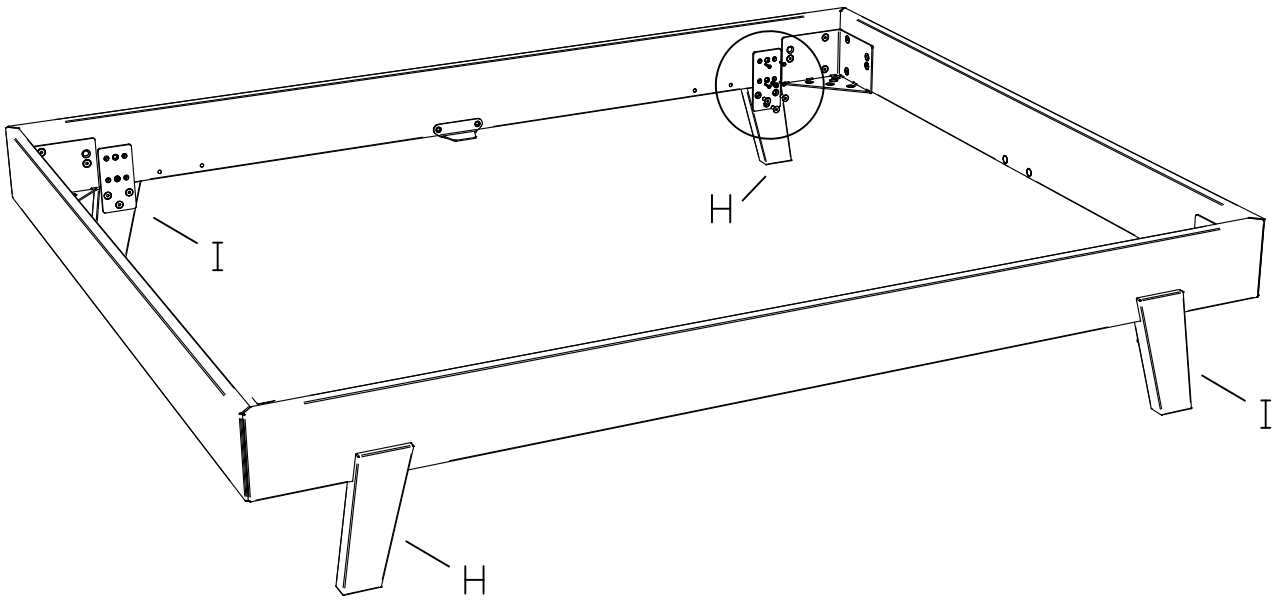

660.01507

zusätzlich bei Breiten ab 160cm
additional for widths from 160cm
à partir des dimensions 160cm
a partire della misura 160cm

N x2

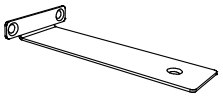

790.023

□ x2

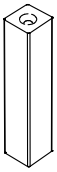

F x6
M8x20

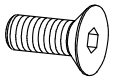

631.872

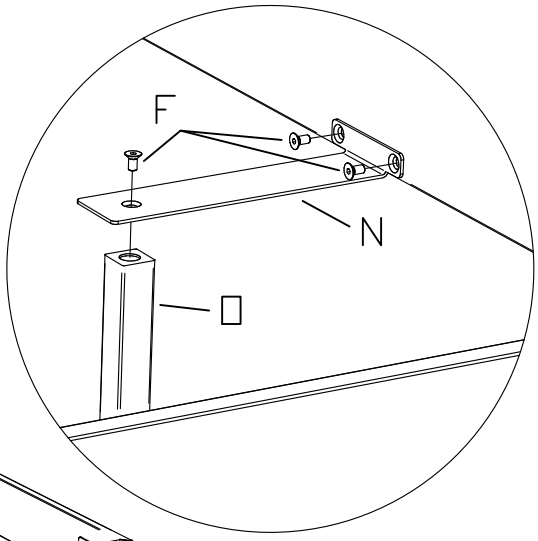

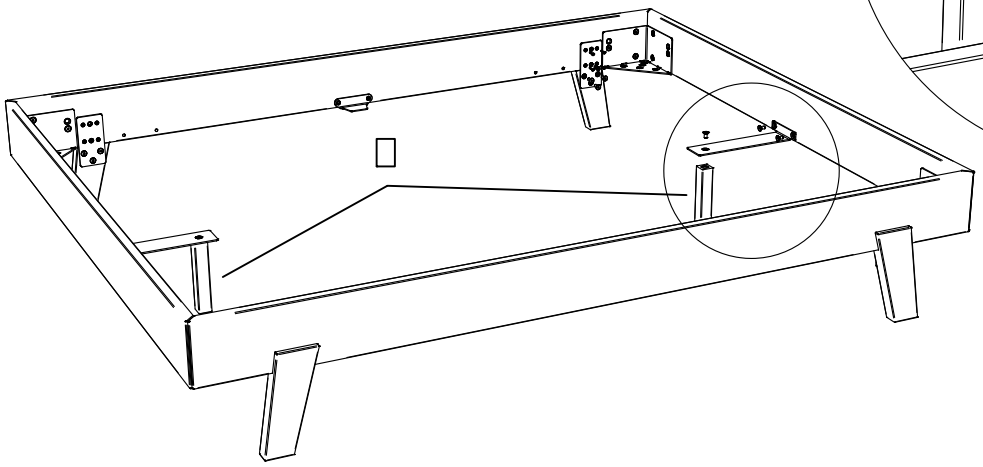

zusätzlich bei Fusshöhe 25
additional for foot height 25
en supplément pour pieds de 25
supporti addizionali per piedi di 25

25cm = 5cm Adapter



793.290

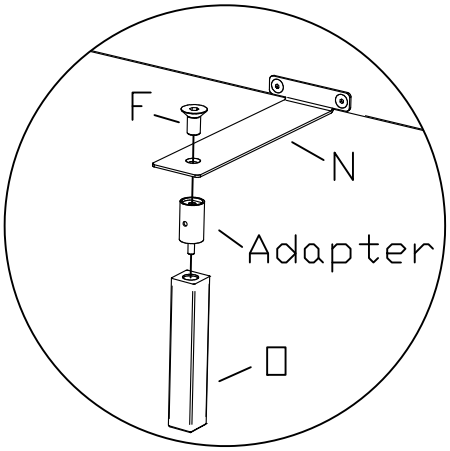

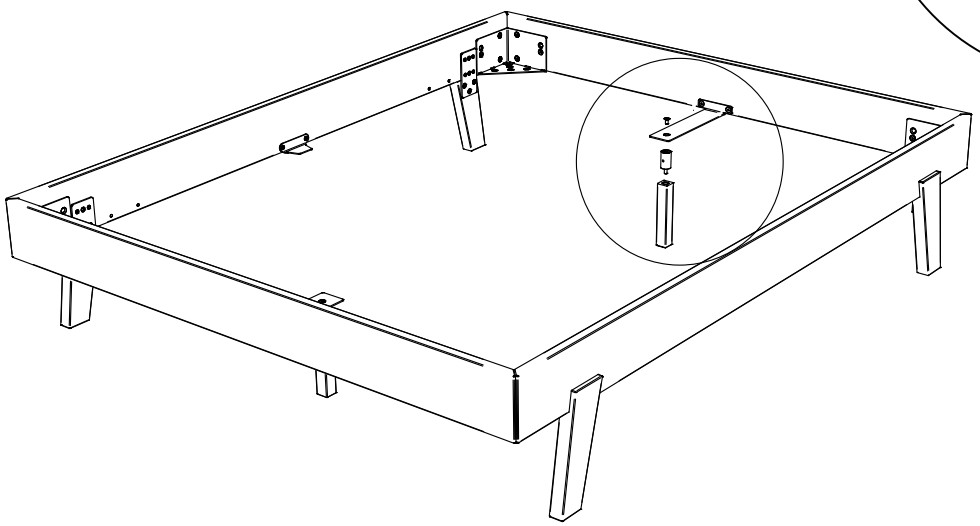

660.01507