swiss bed concept

MONTAGEANLEITUNG
NOTICE DE MONTAGE
ASSEMBLY INSTRUCTION
ISTRUZIONE DI MONTAGGIO

HASENA
the dream factory

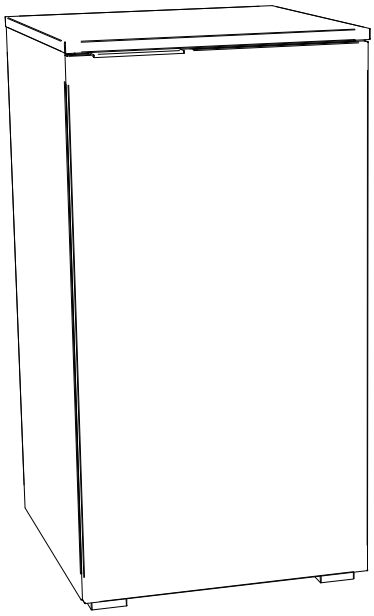

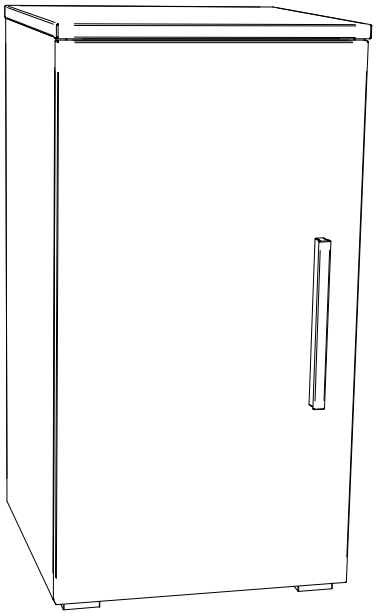

Option...

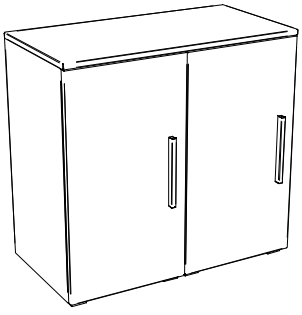



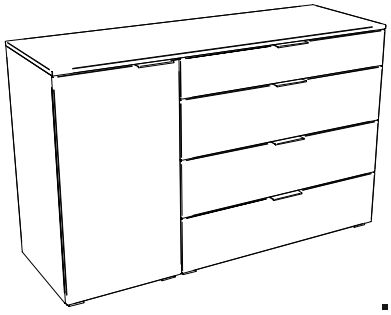

...

Benötigte Werkzeuge – Outils Nécessaires – Tools Required – Attrezzi Necessari

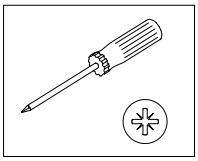

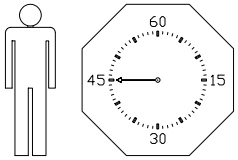

24.07.2023

660.01283

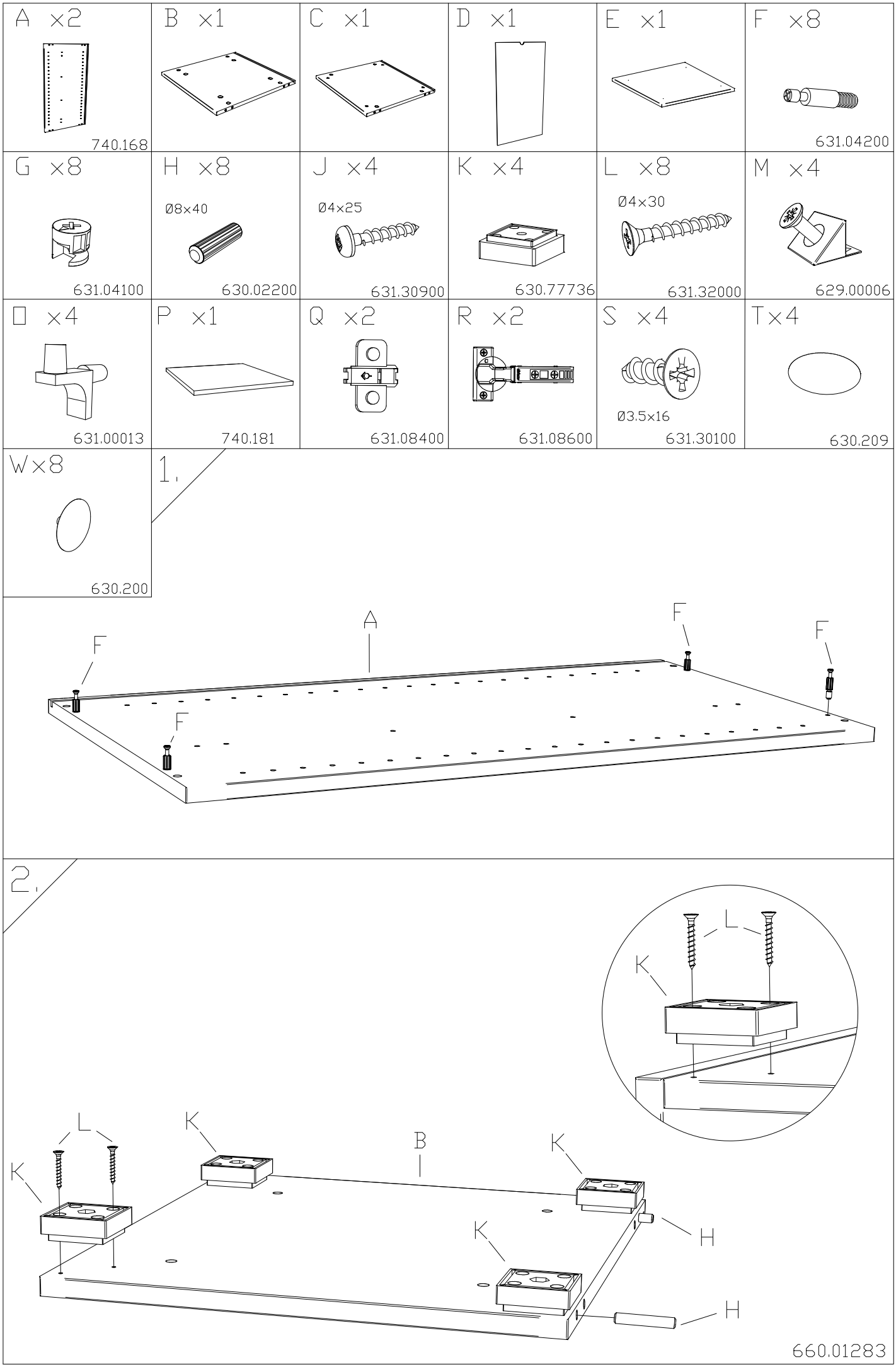
A x2
740.168
B x1
C x1
D x1
E x1
F x8
631.04200
G x8
631.04100
H x8
Ø8x40
630.02200
J x4
Ø4x25
631.30900
K x4
630.77736
L x8
Ø4x30
631.32000
M x4
629.00006
O x4
631.00013
P x1
740.181
Q x2
631.08400
R x2
631.08600
S x4
Ø3.5x16
631.30100
T x4
630.209
W x8
630.200
1.
A
F
F
F
F
2.
L
K
L
K
B
K
K
H
K
H
660.01283

3.

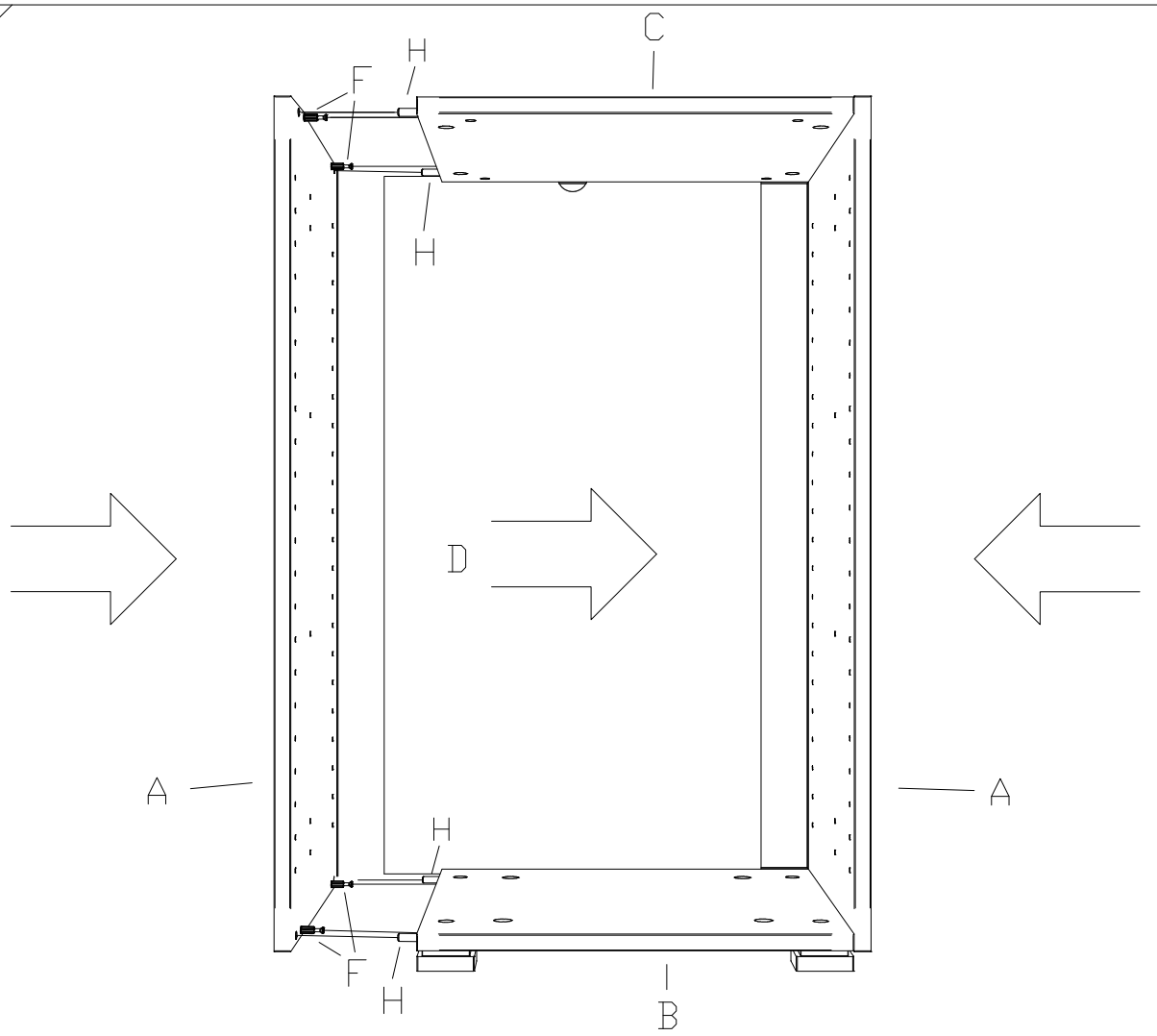

4.

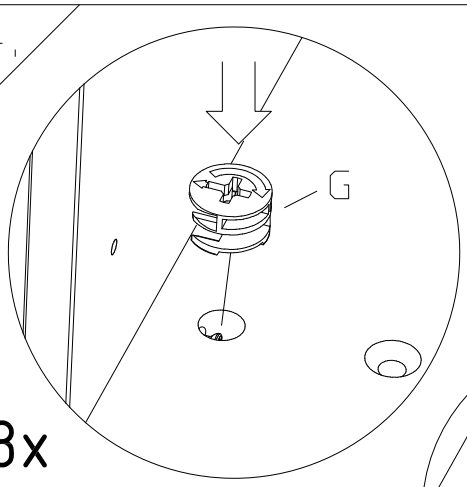

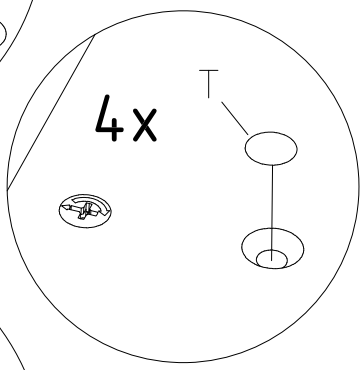

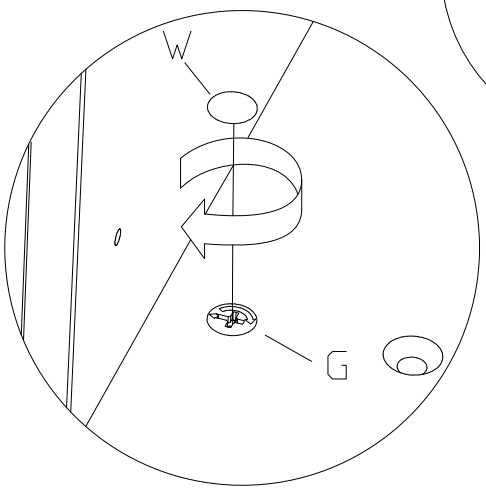

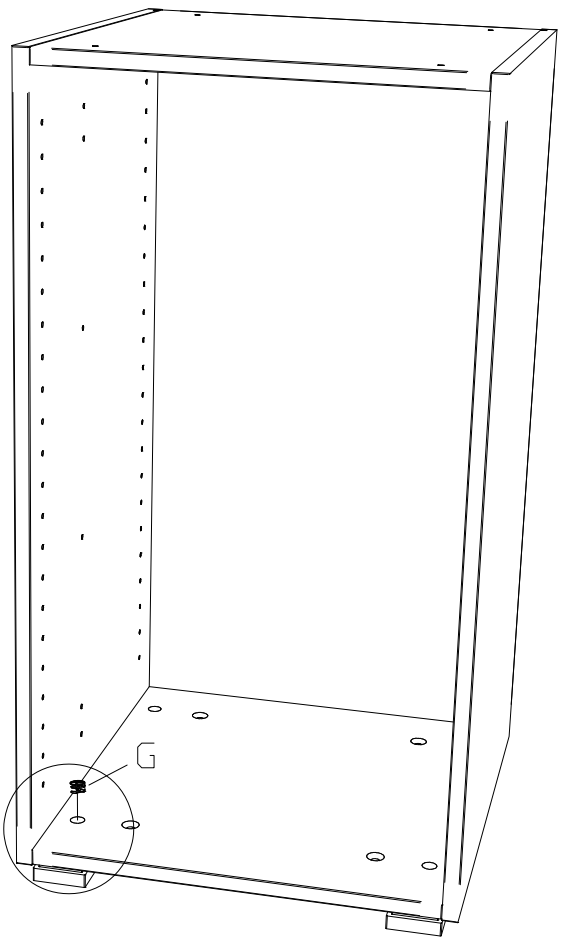

660.01283

5.

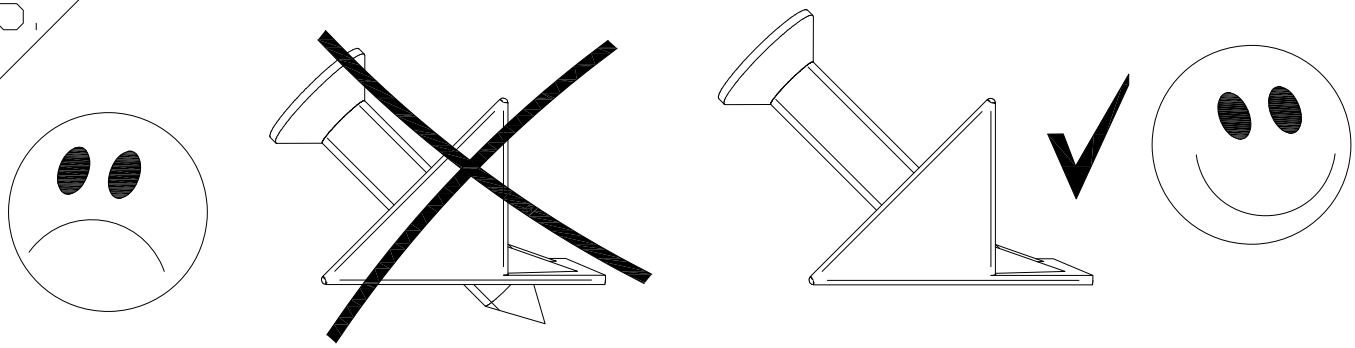

6.

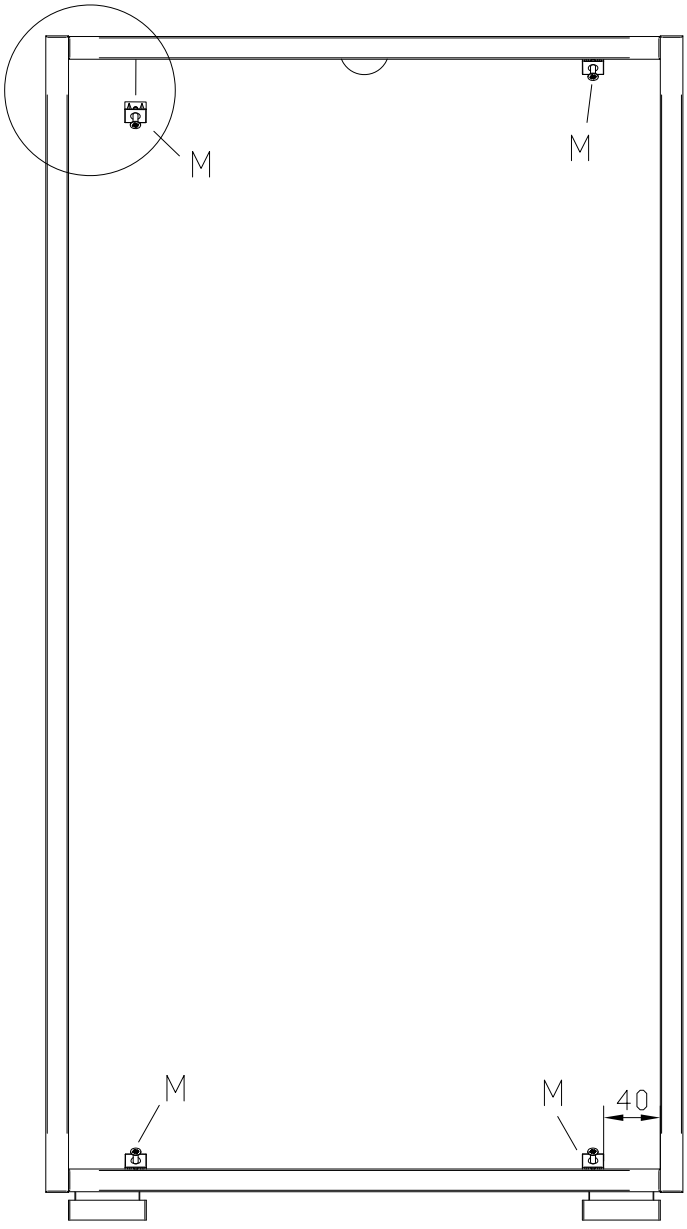

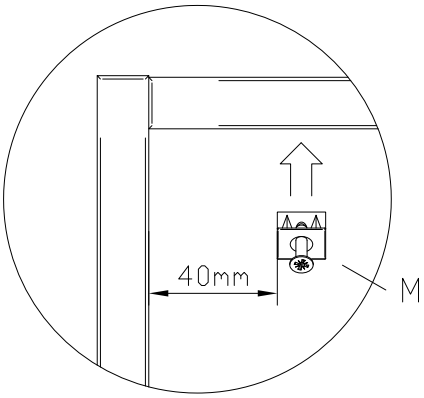

1.

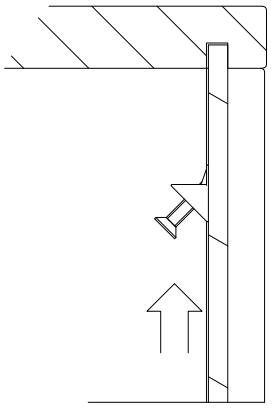

2.

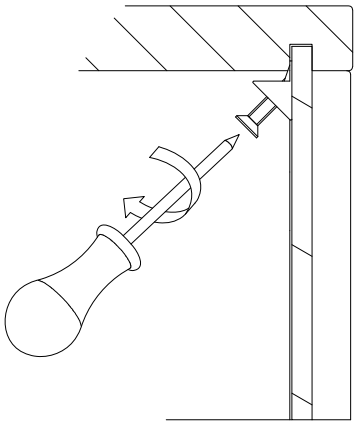

660.01283

Option

E ×1	J ×8	I ×4	V ×4	
	Ø4×25 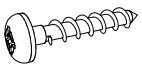 631.30900	 631.20100	 631.20200	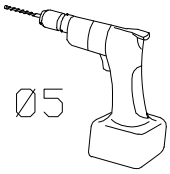 Ø5

1.

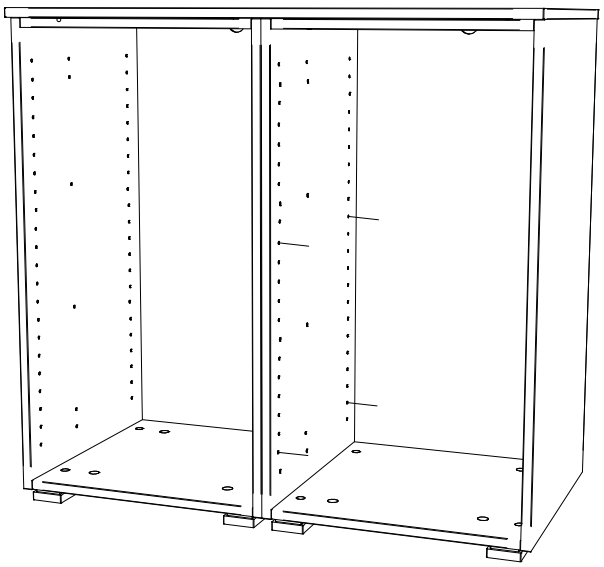

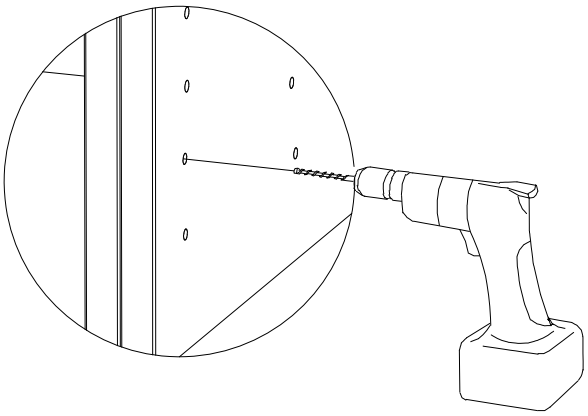

2.

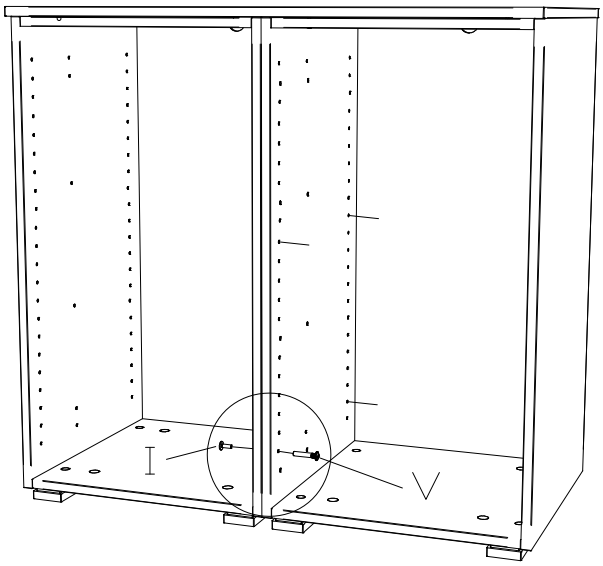

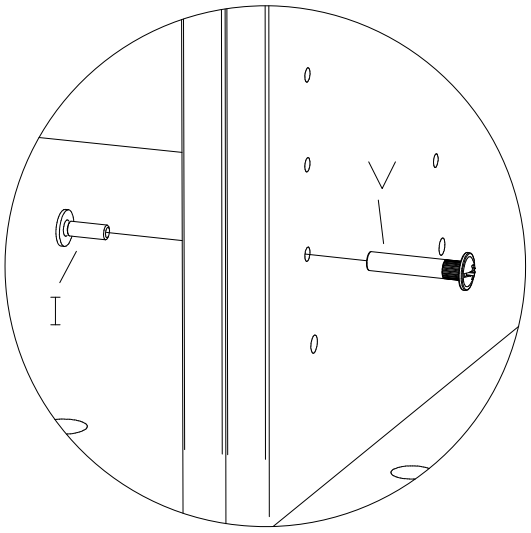

3.

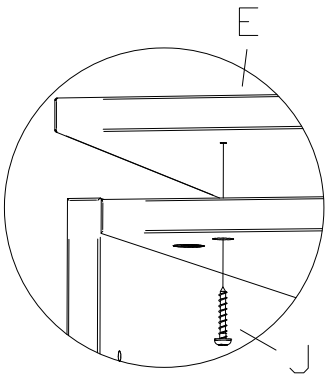

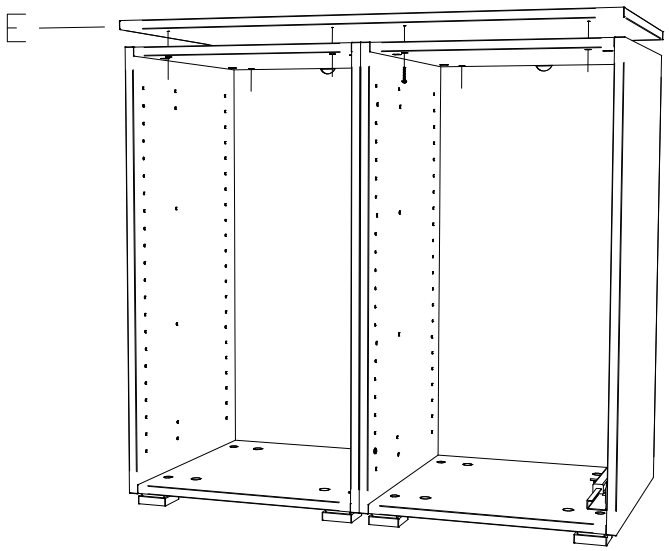

660.01283

7.

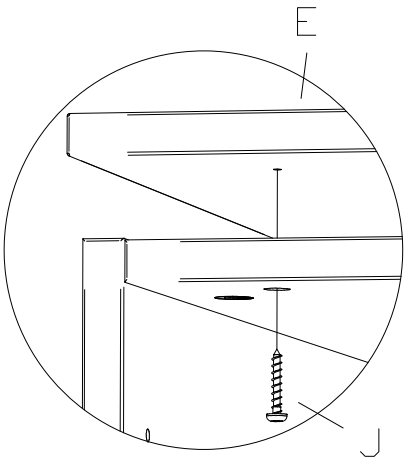

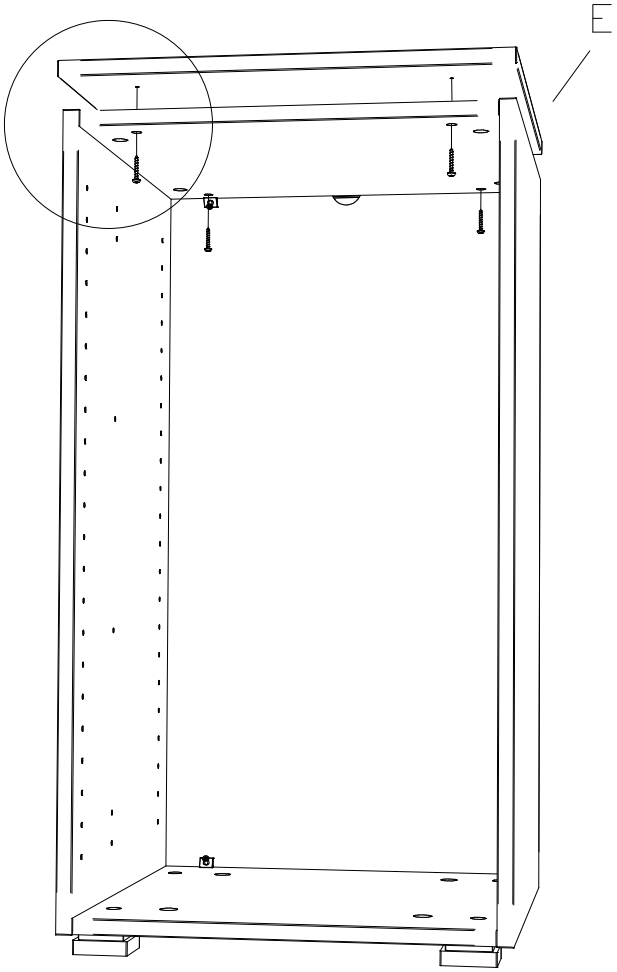

8.

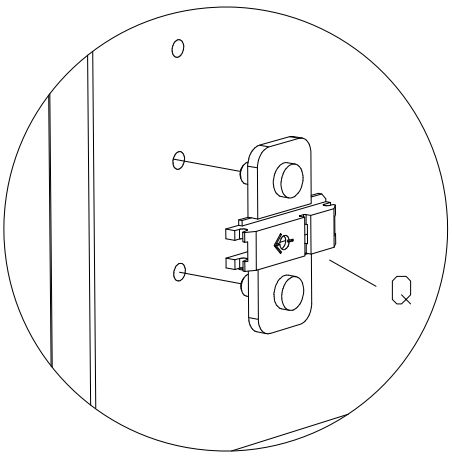

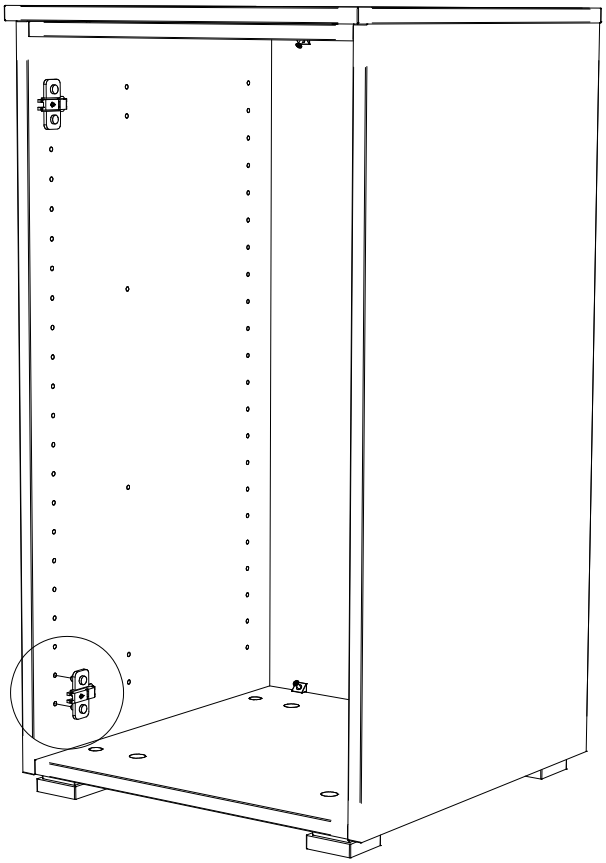

Version A

T ×1

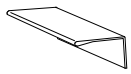

630.80336

U ×2

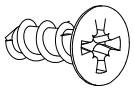

631.24000

9.



Version B

T ×1



740.208

U ×2

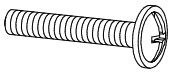

631.31700

9.

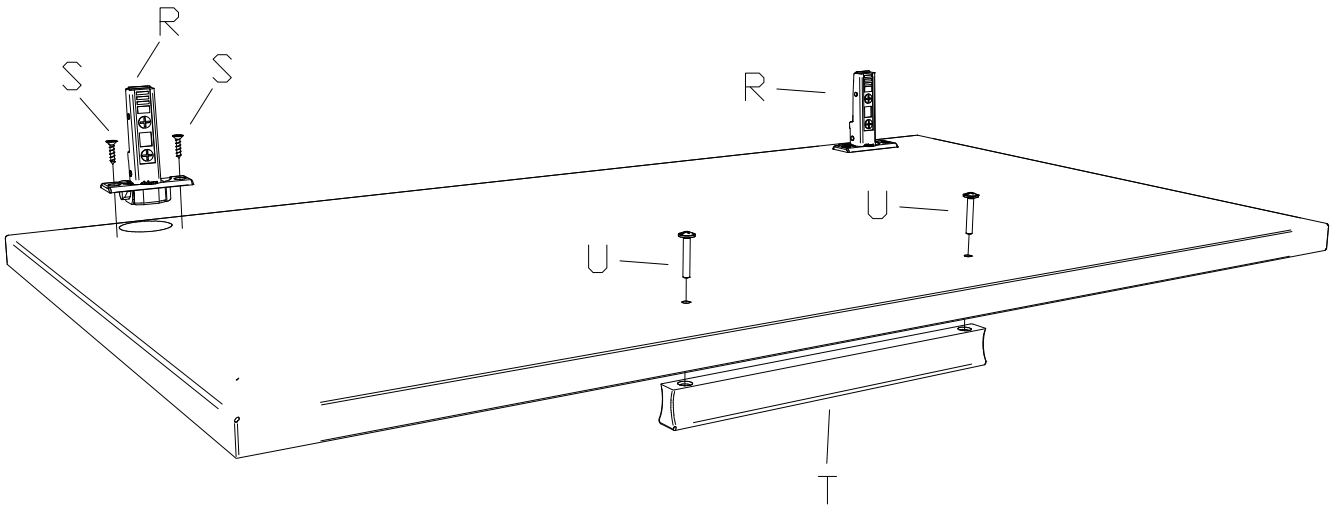

660.01283

10.

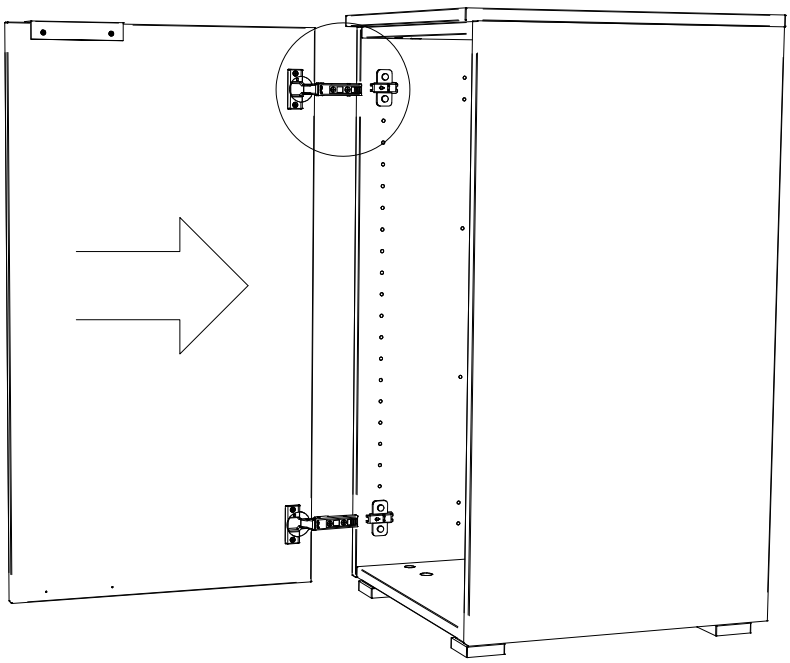

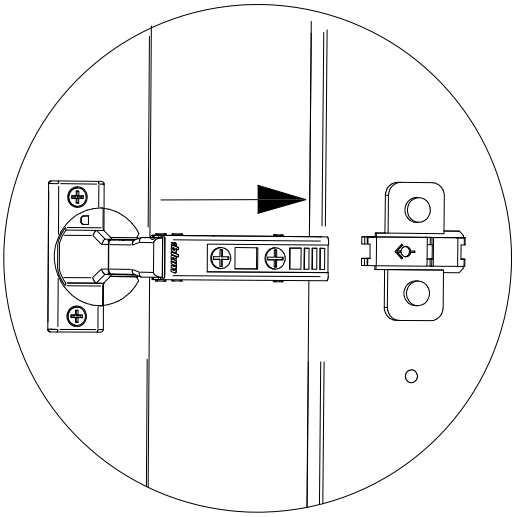

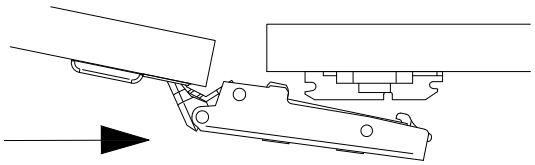

11.

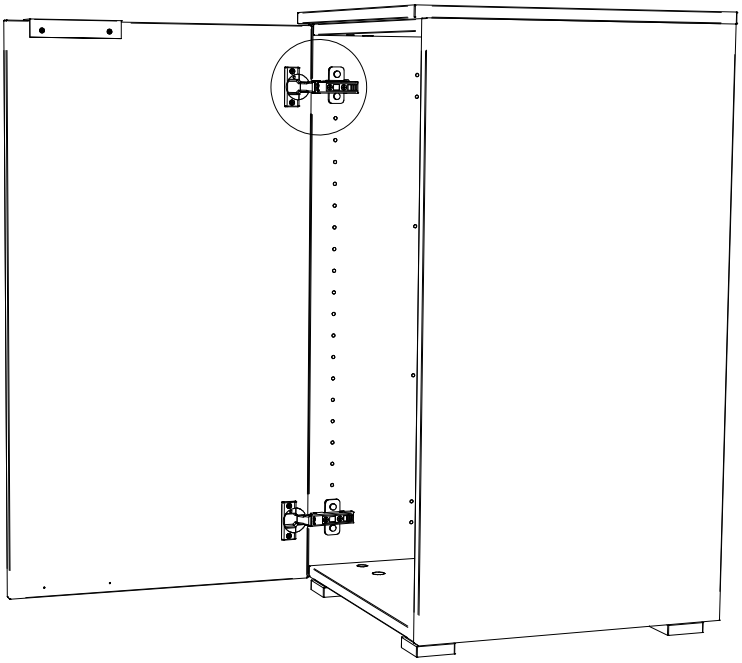

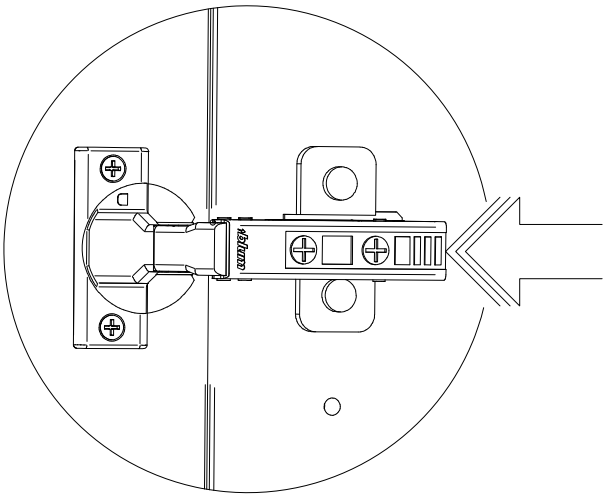

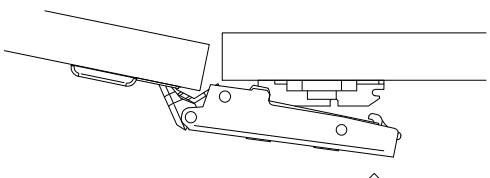

12.

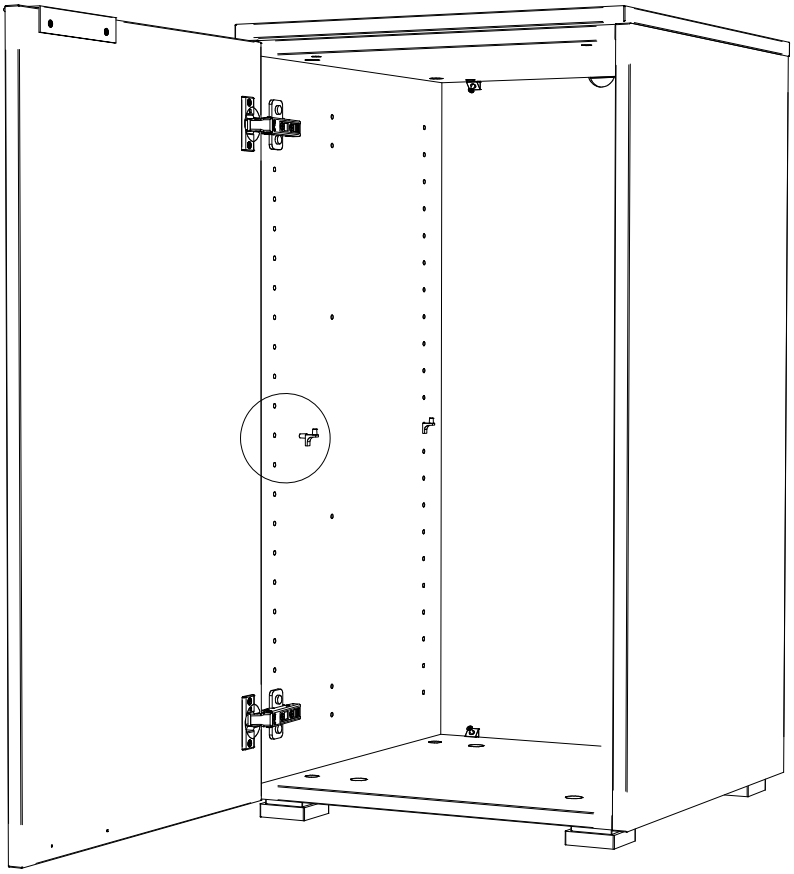

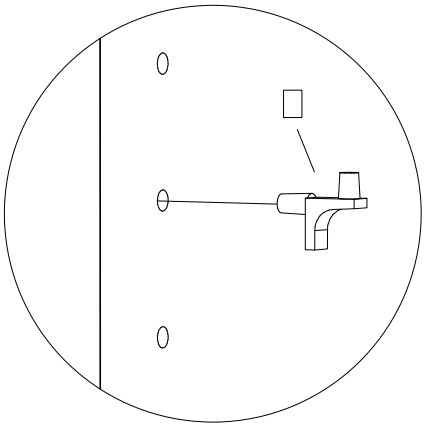

13.

