swiss bed concept

MONTAGEANLEITUNG
NOTICE DE MONTAGE
ASSEMBLY INSTRUCTION
ISTRUZIONE DI MONTAGGIO

HASENA
the dream factory

Stupendo

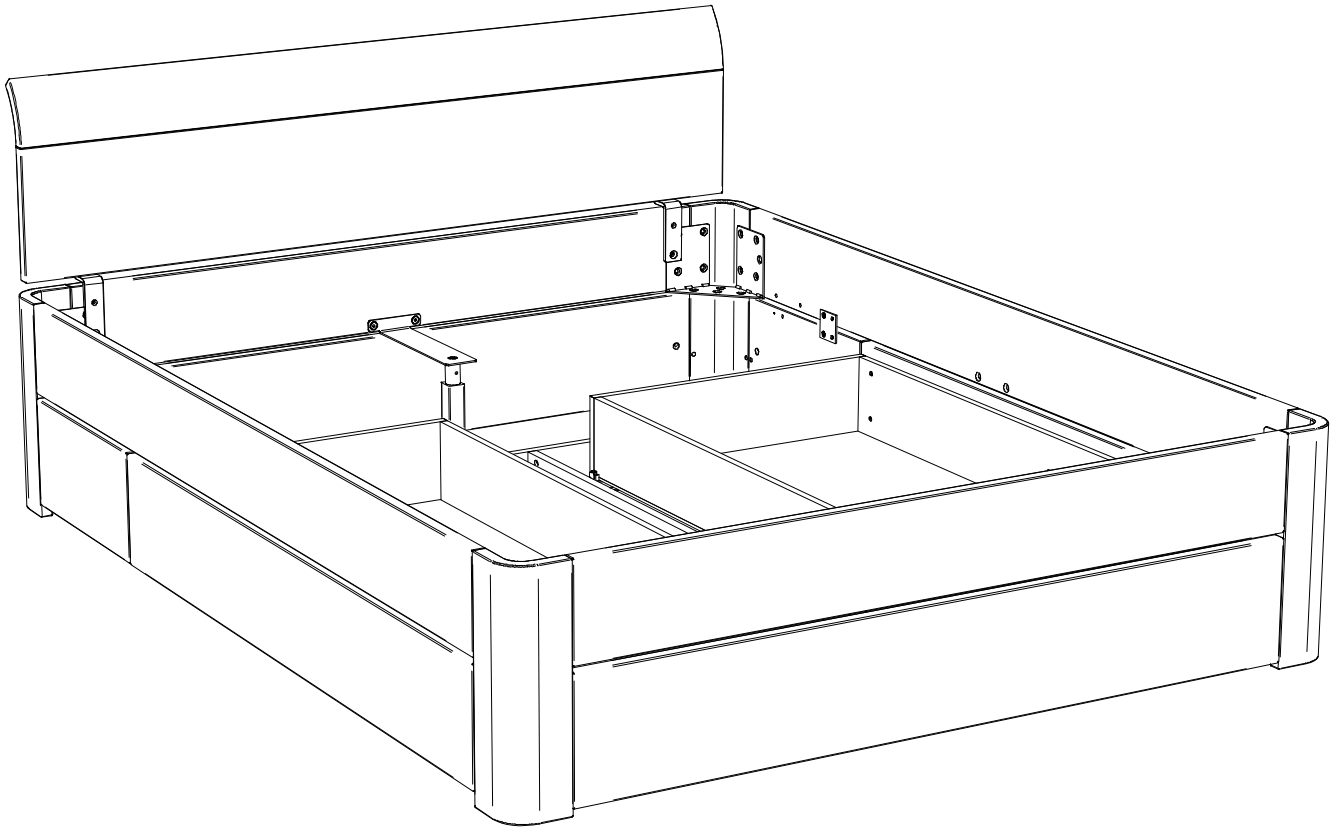

Benötigte Werkzeuge – Outils Nécessaires – Tools Required – Attrezzi Necessari

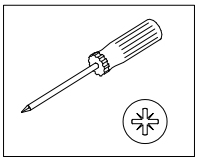

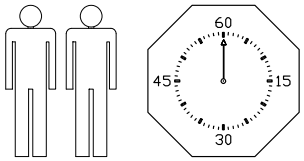

A ×2

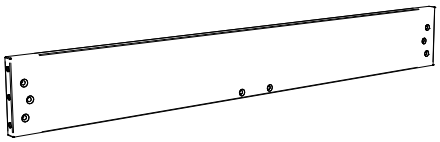

B ×2

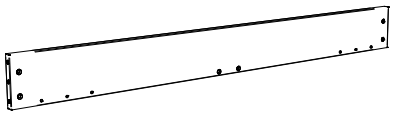

C ×2

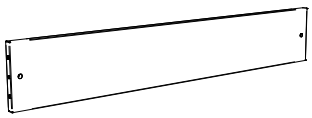

D ×2

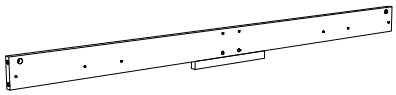

E ×1

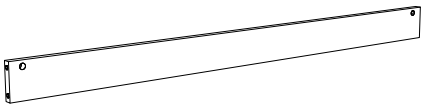

749.871

F ×2

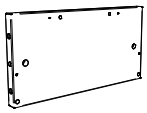

G ×4

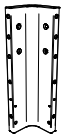

H ×4

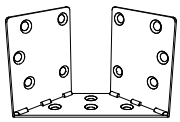

630.10442

I ×42

Ø10×50

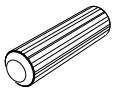

630.02400

K ×36

M8×20

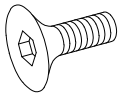

631.87200

L ×2

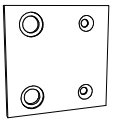

790.27642

M ×2

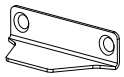

630.099

N ×12

Ø7×34

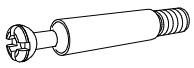

631.06400

O ×12

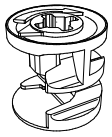

631.00005

P ×4

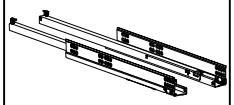

2×L 629.00094
2×R 629.00095

Q ×4

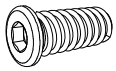

631.601

R ×12



631.06100

S ×4

Ø4×20

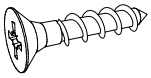

631.30300

Z ×1

SW5

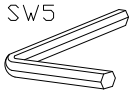

631.10000

1.

2×

1×GL

1×GR

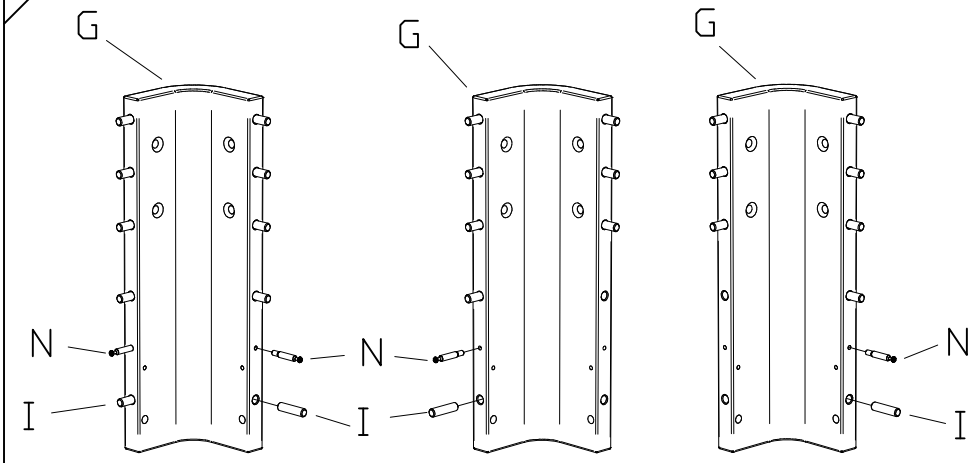

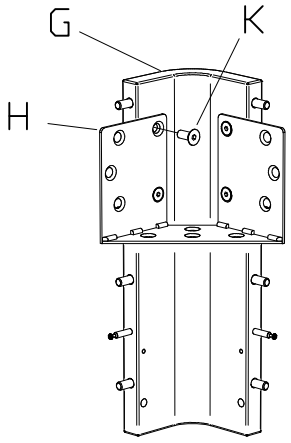

2.

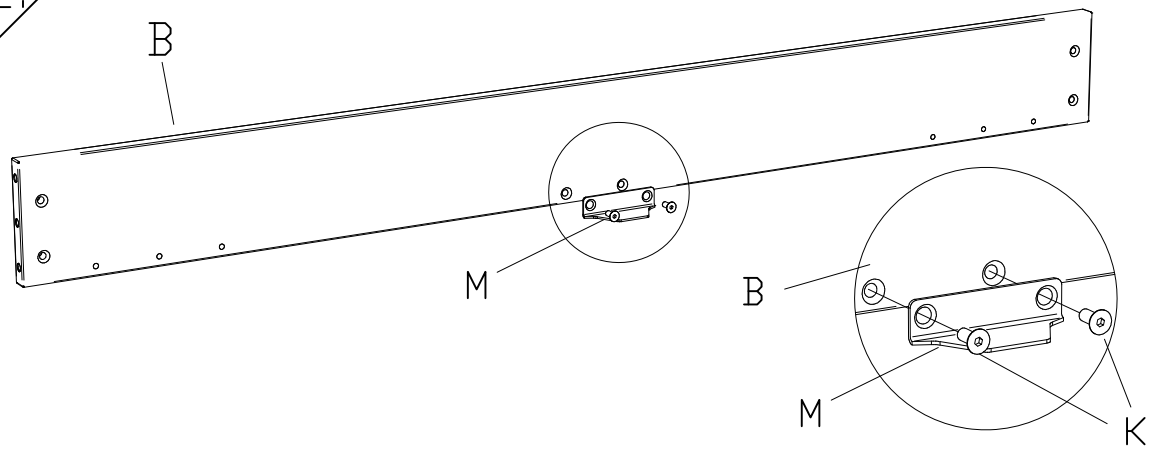

660.01251

3.

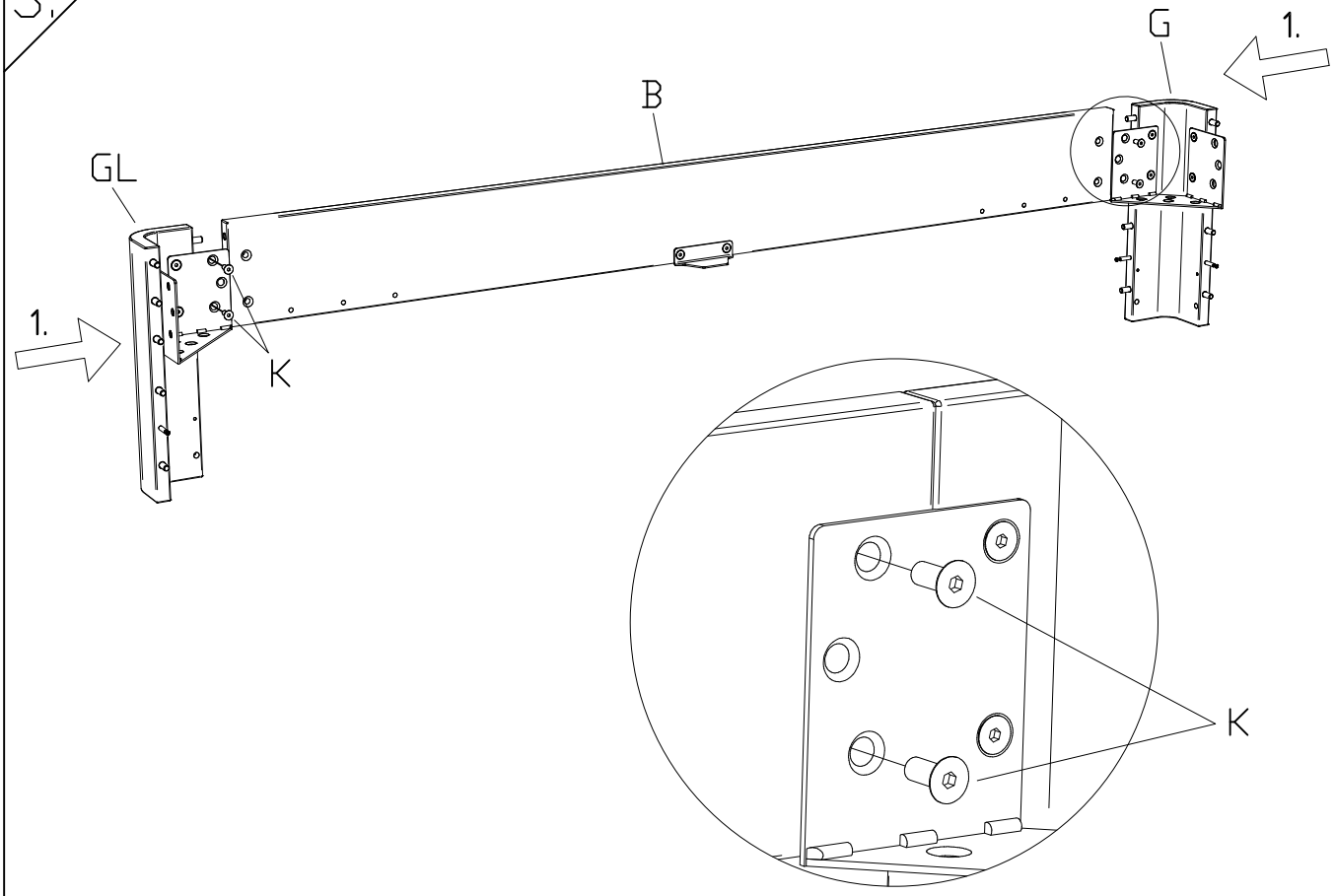

4.

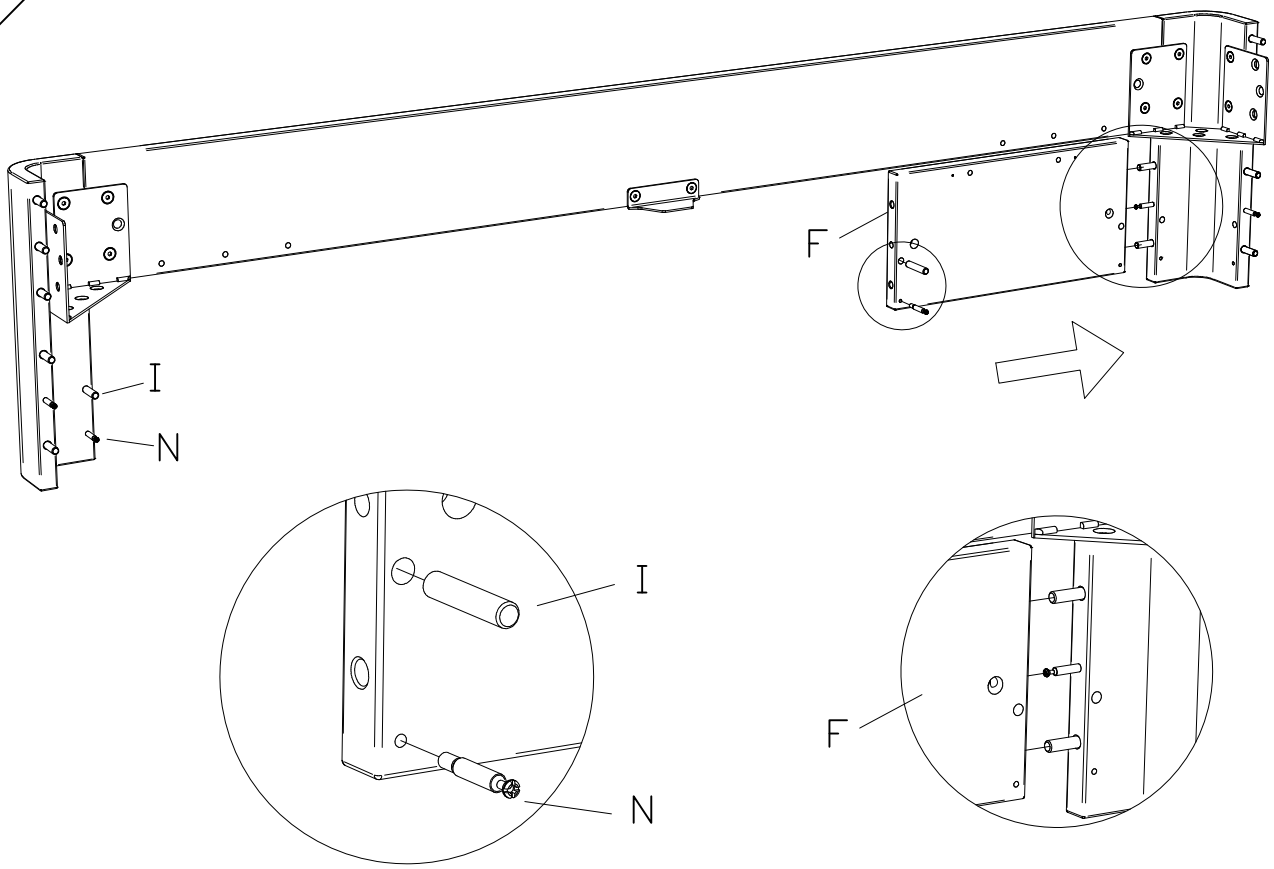

660.01251

5.

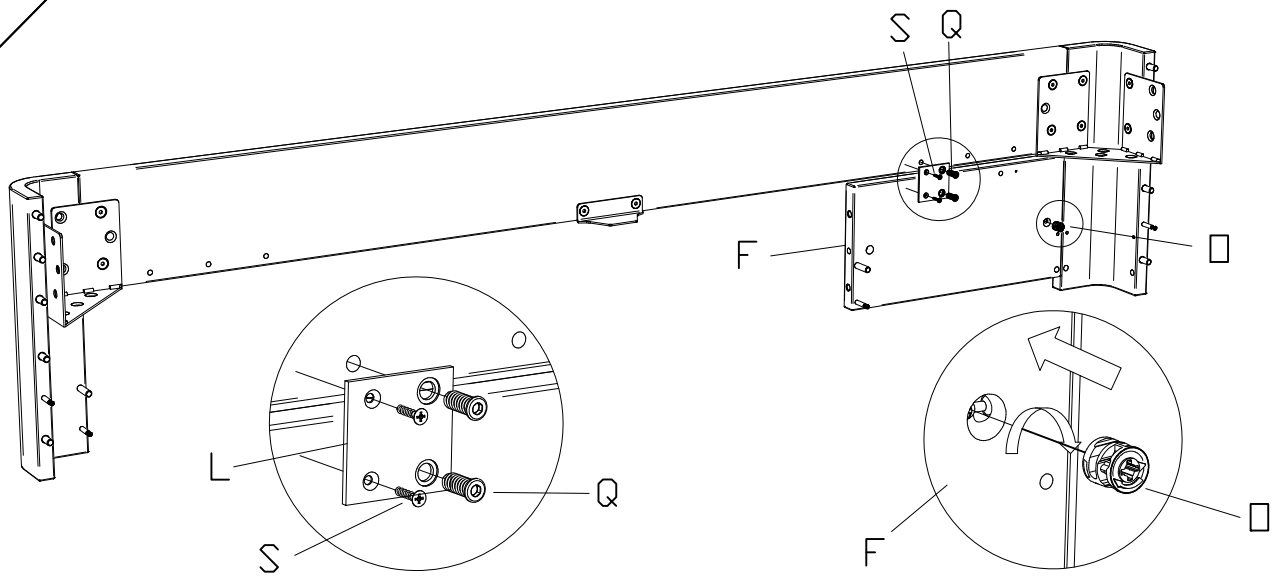

6.

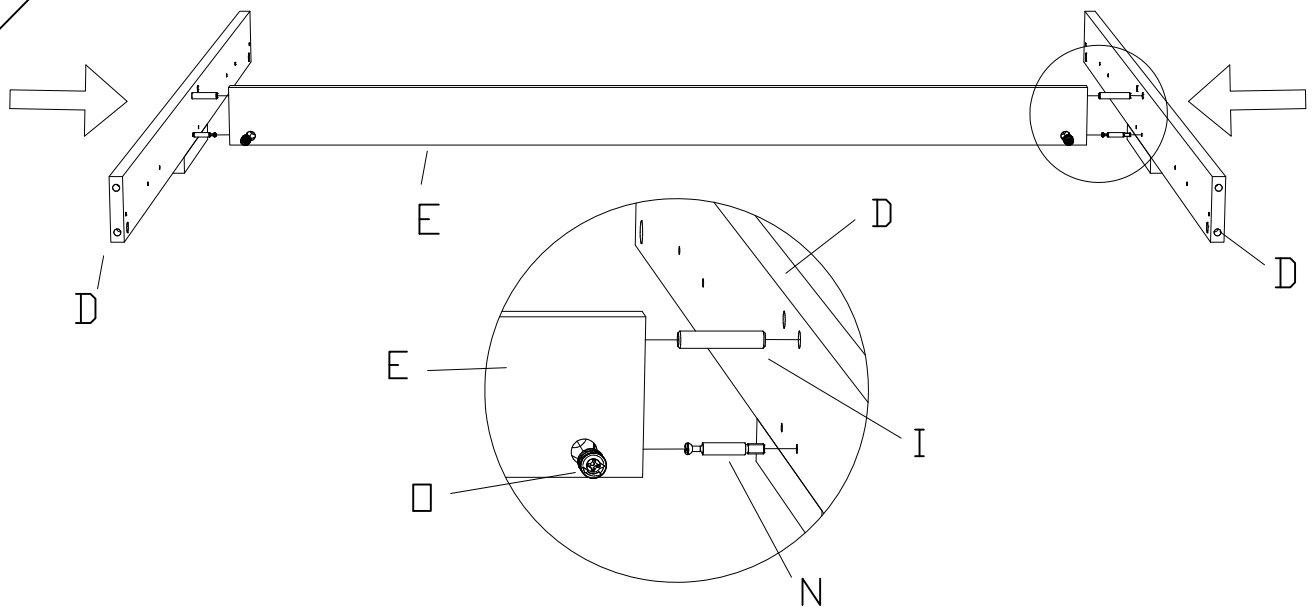

7.

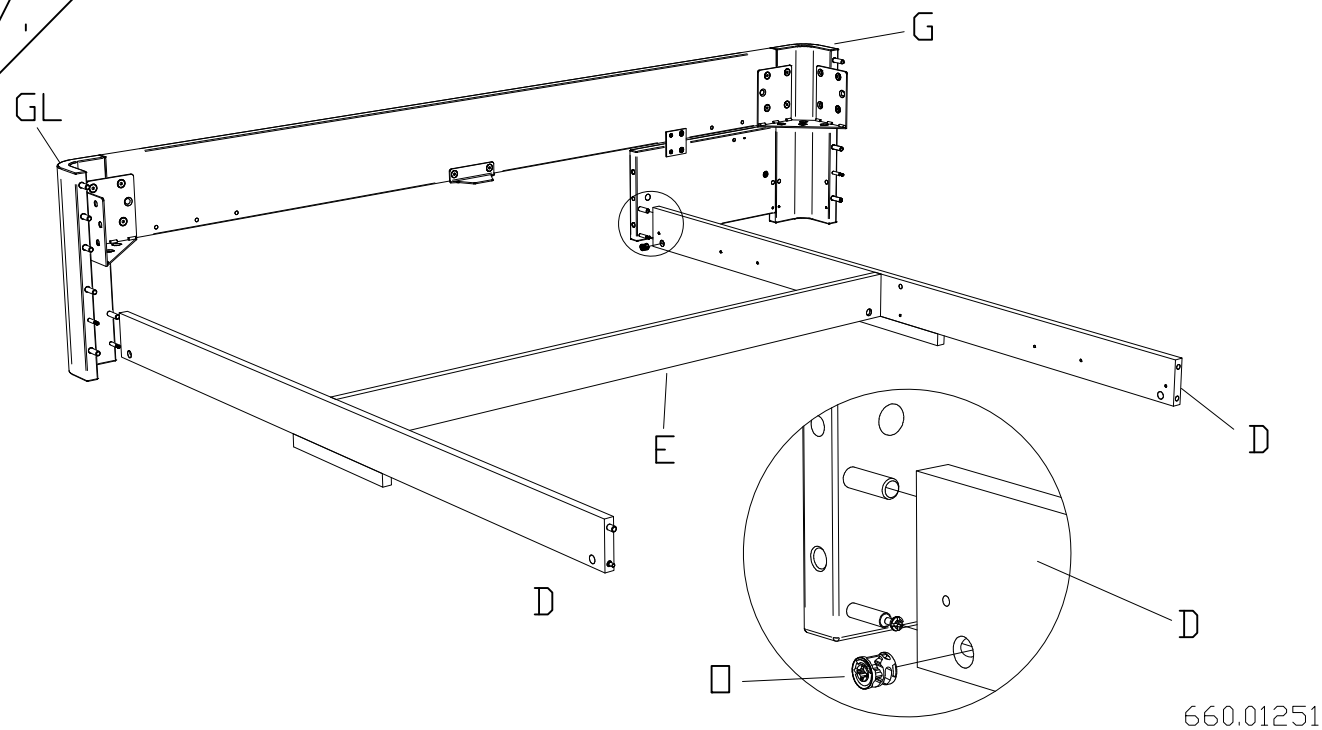

660.01251

zusätzlich bei Breiten ab 160cm
à partir des dimensions 160cm

additional for widths from 160cm
a partire della misura 160cm

T x2	U x2	K x6	V x2
790.023		M8x20 631.87200	793.290

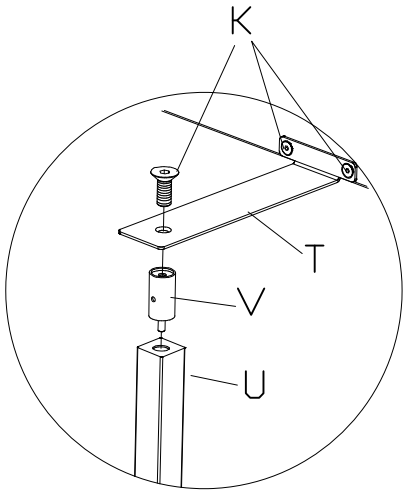

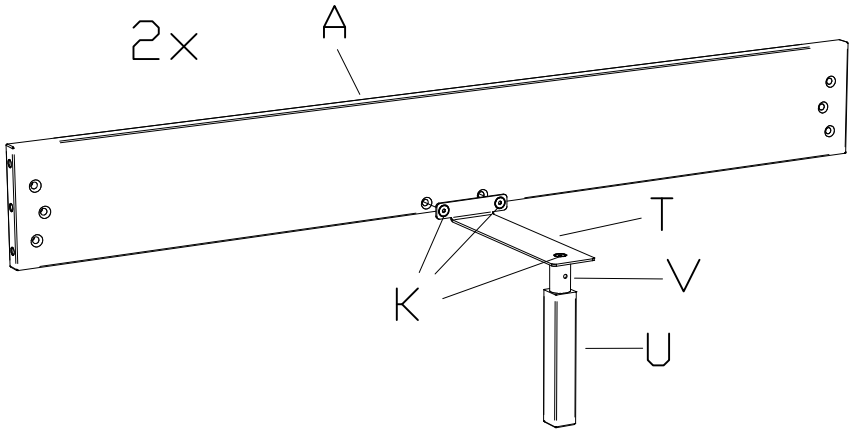

8.

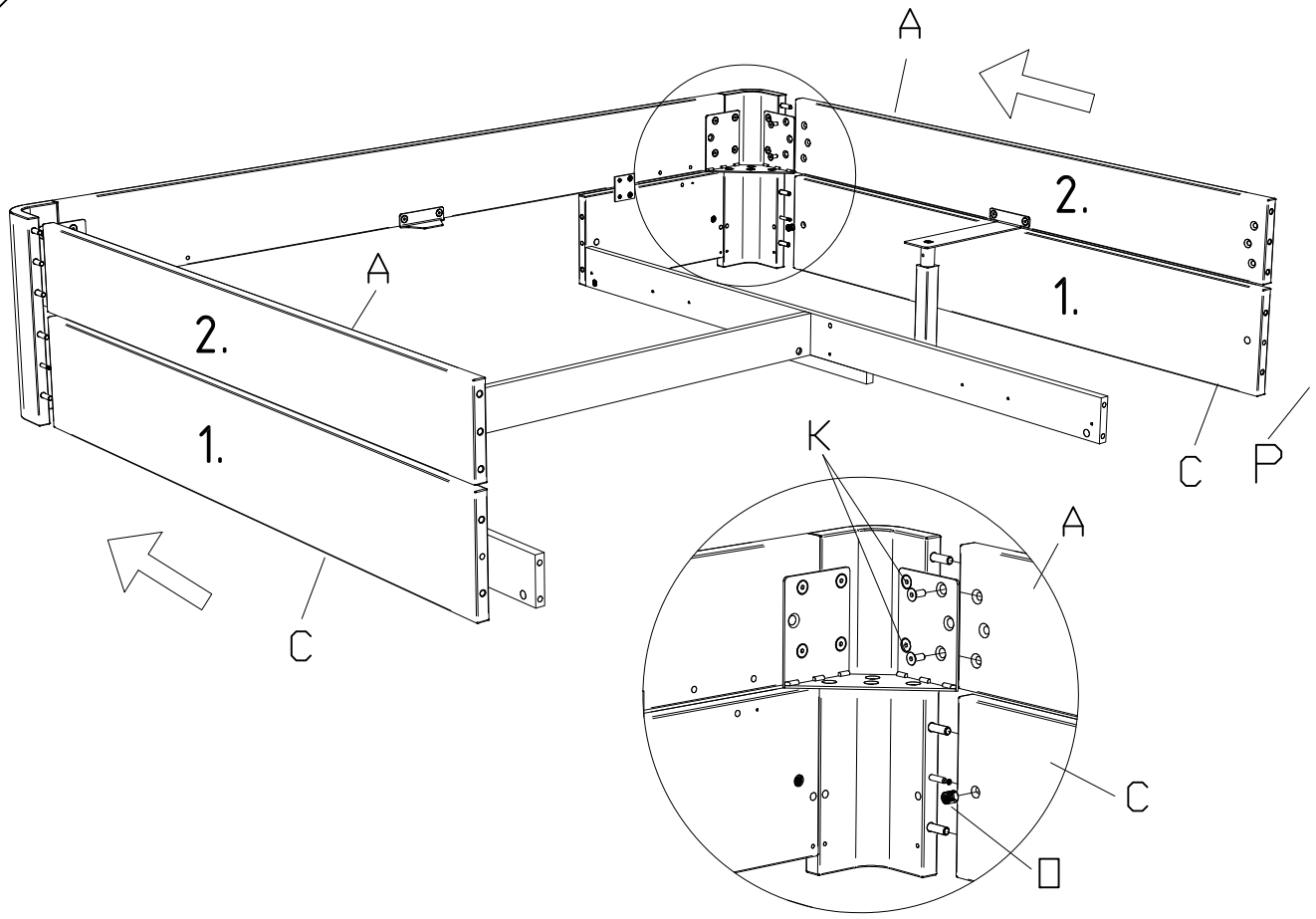

660.01251

9.

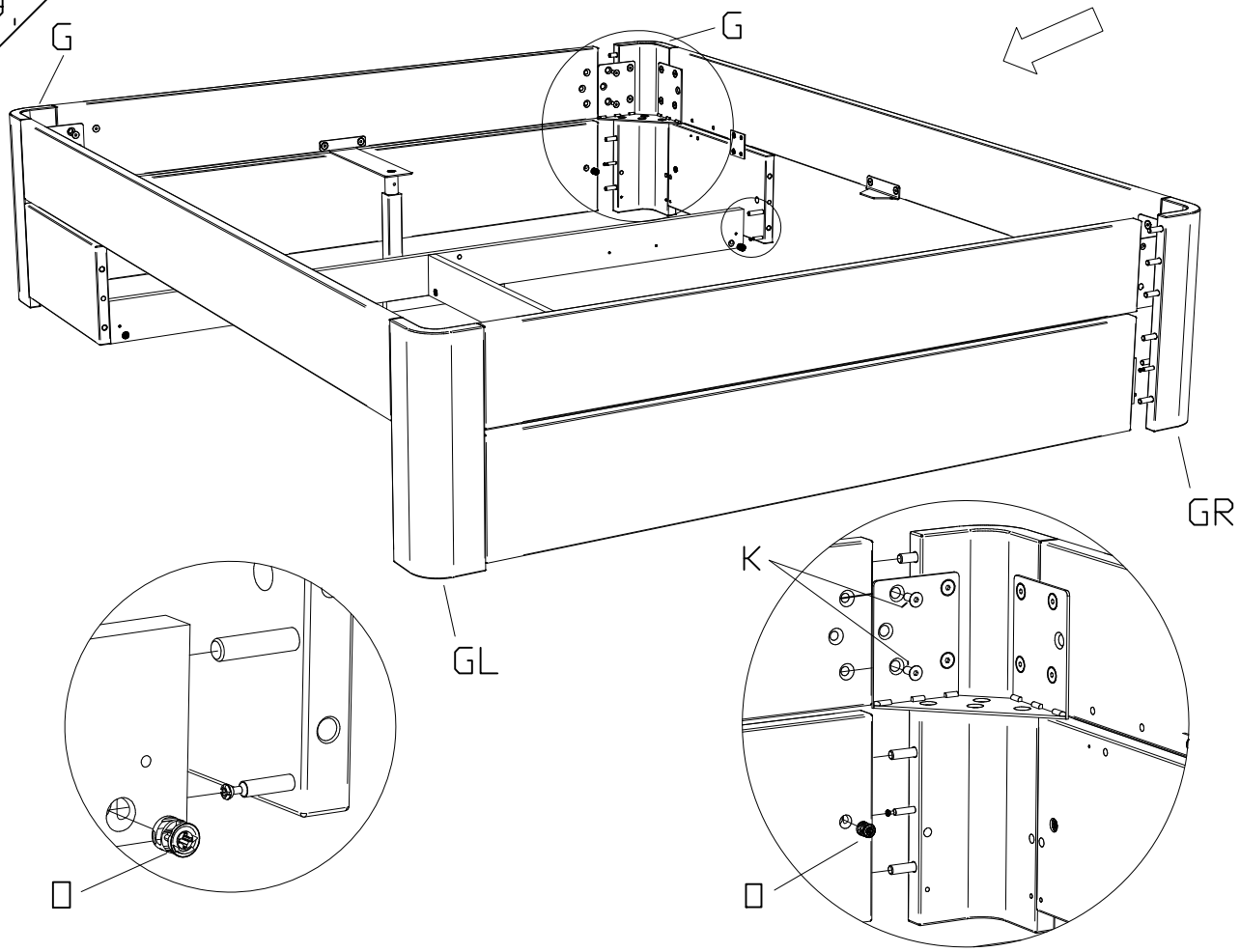

10.

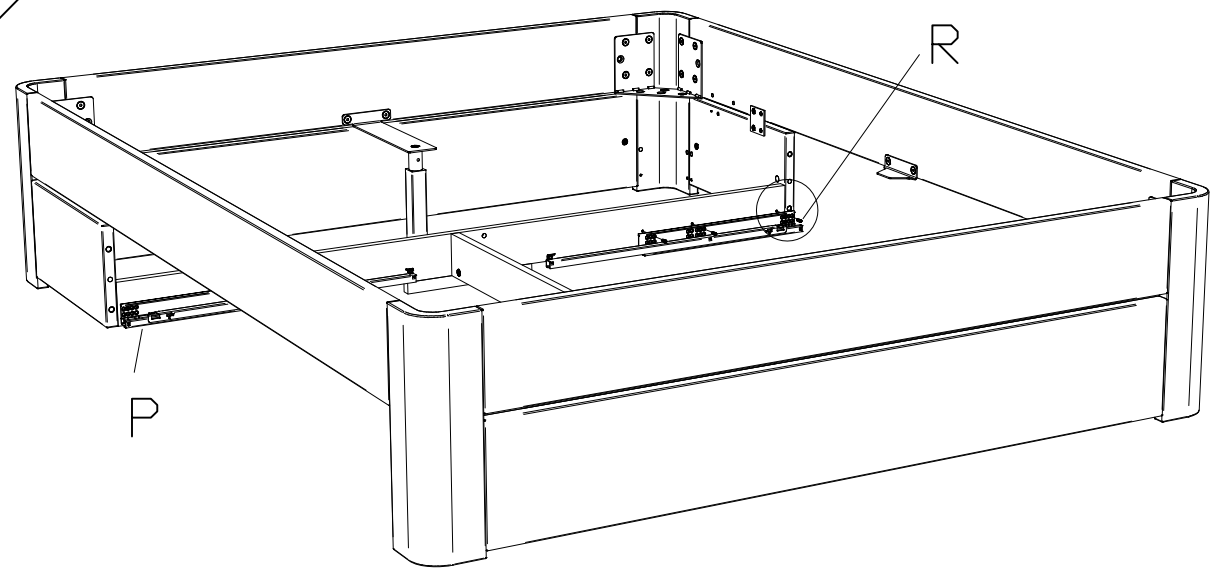

Casone, Belluno

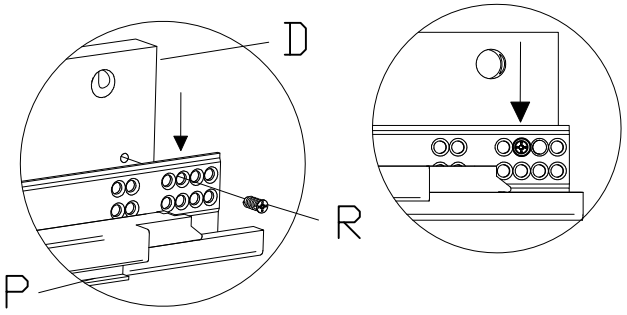

Bellissimo

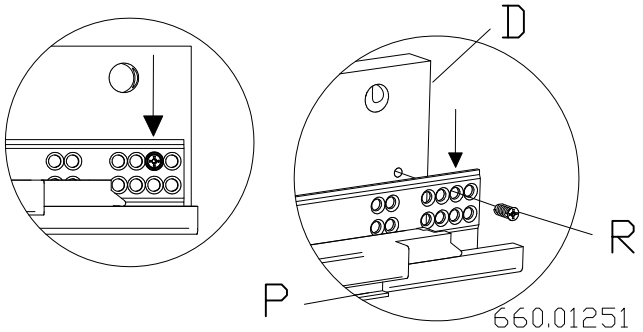

660.01251

AA 1x

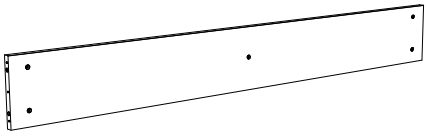

749.886

AB x1

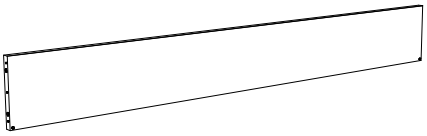

749.888

AC x1

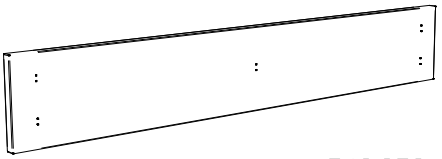

749.873

AD x2

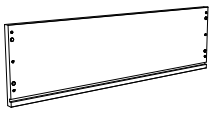

749.887

AE x1



749.889

AF x2

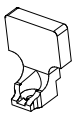

629.00111

AG x2

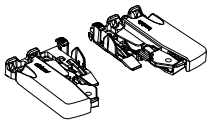

li 629.00096
re 629.00097

AH x14

Ø4x25

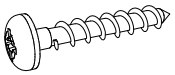

631.30900

AI x4

Ø4x12

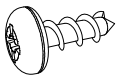

631.1630

AK x2

Ø3.5x20

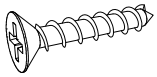

631.300

AL x13

Ø4x35

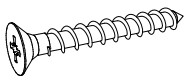

631.346

AM x8

Ø8x30

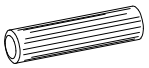

630.021

11.

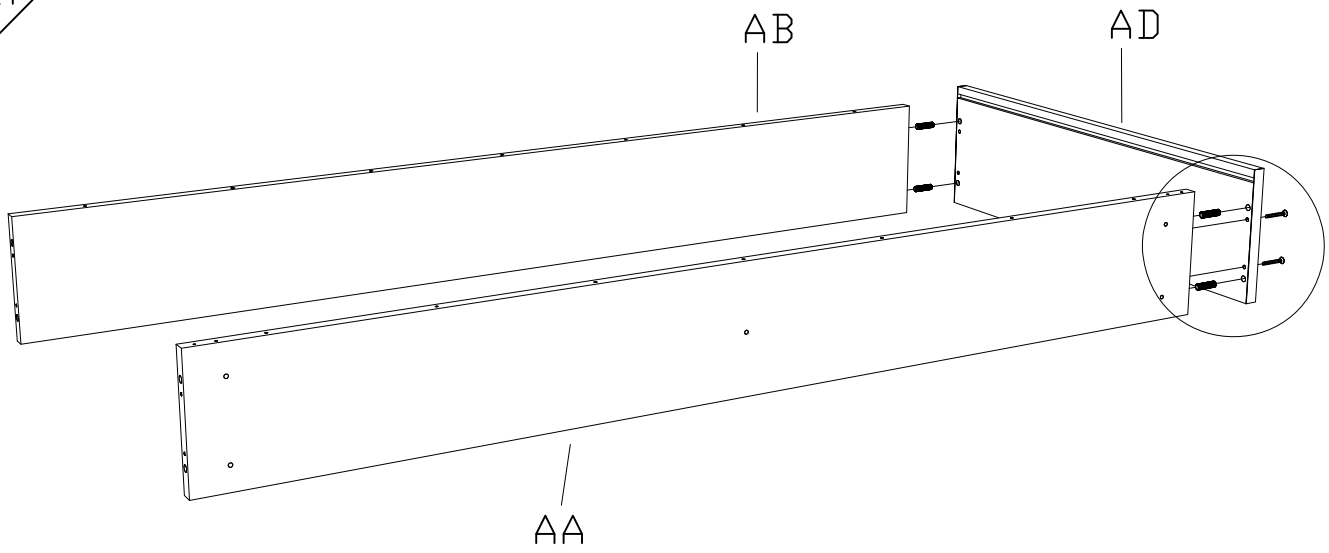

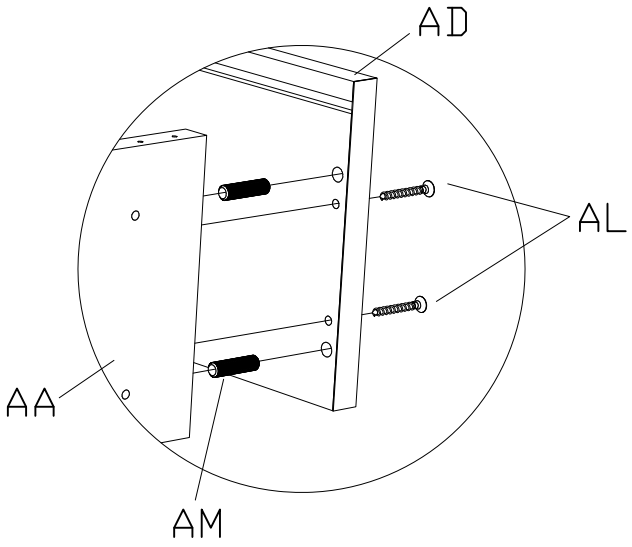

660.01251

12.

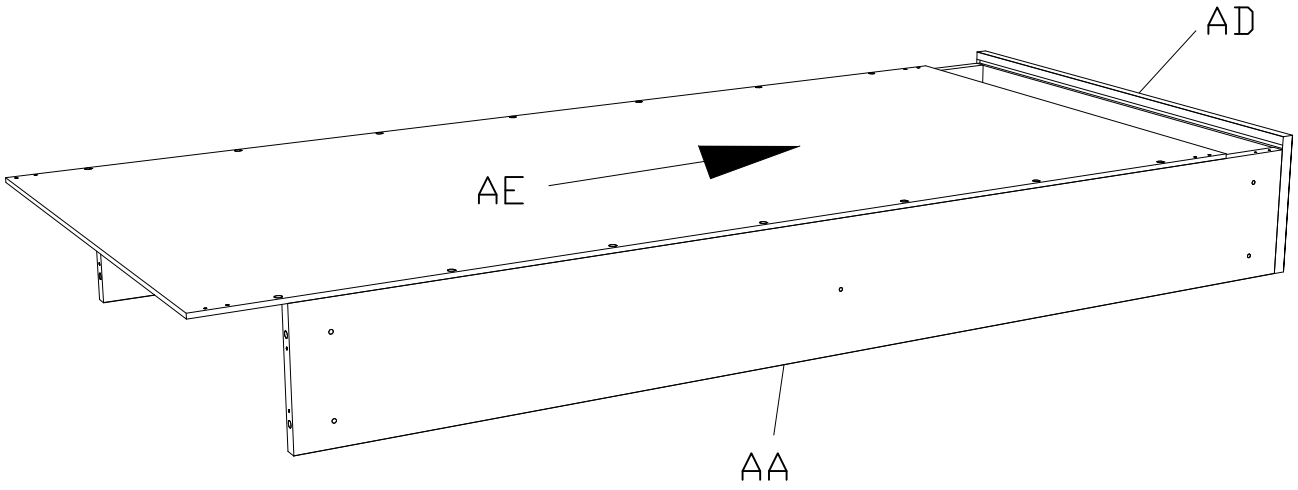

13.

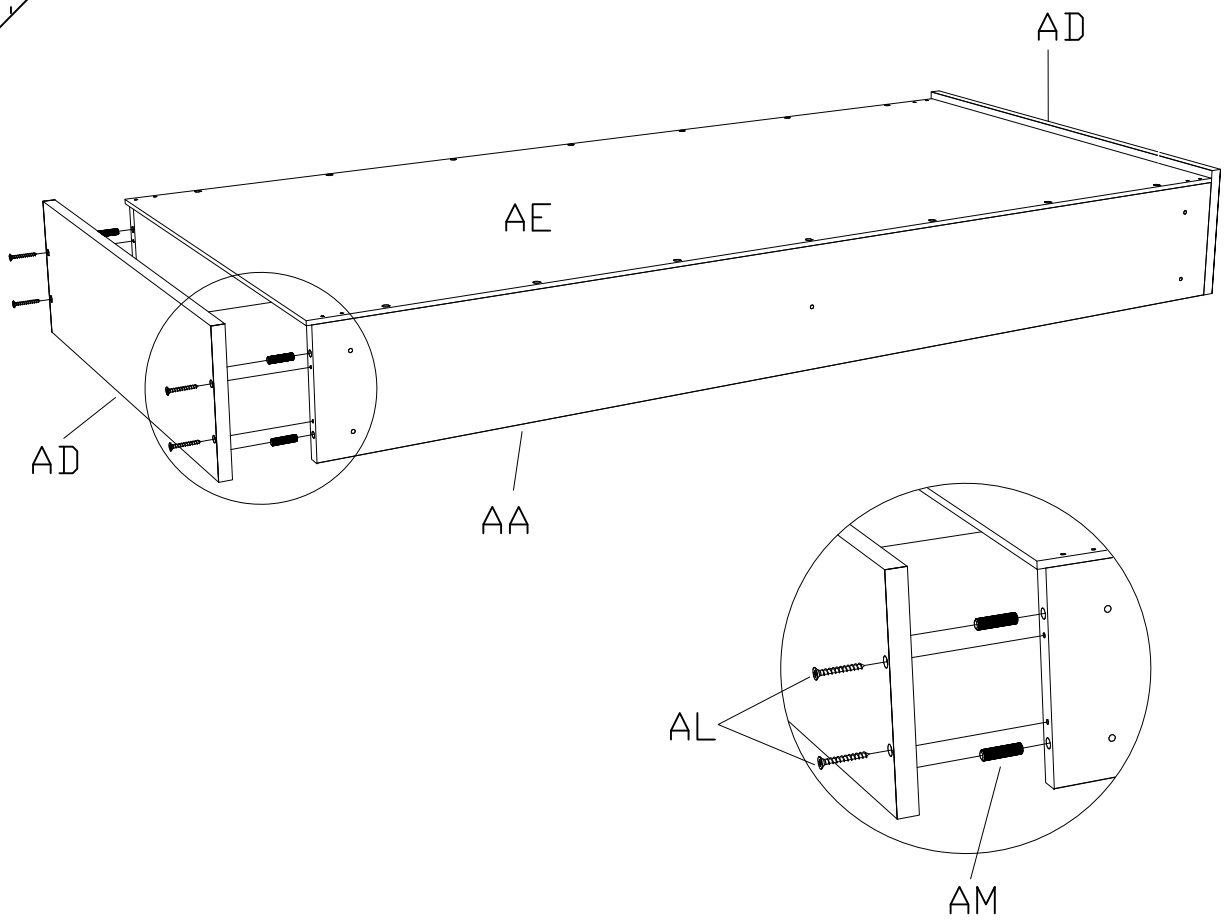

660.01251

14.

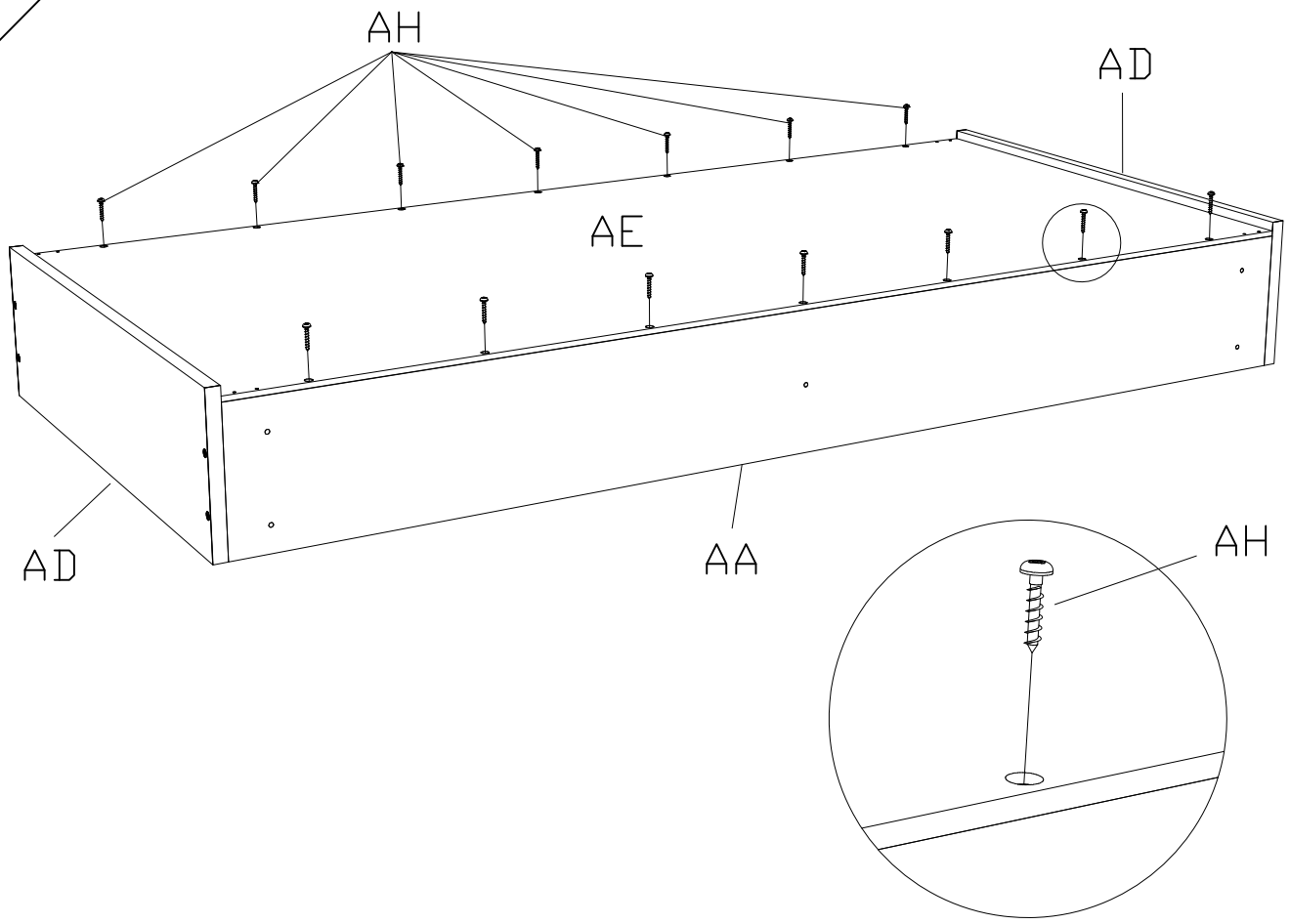

15.

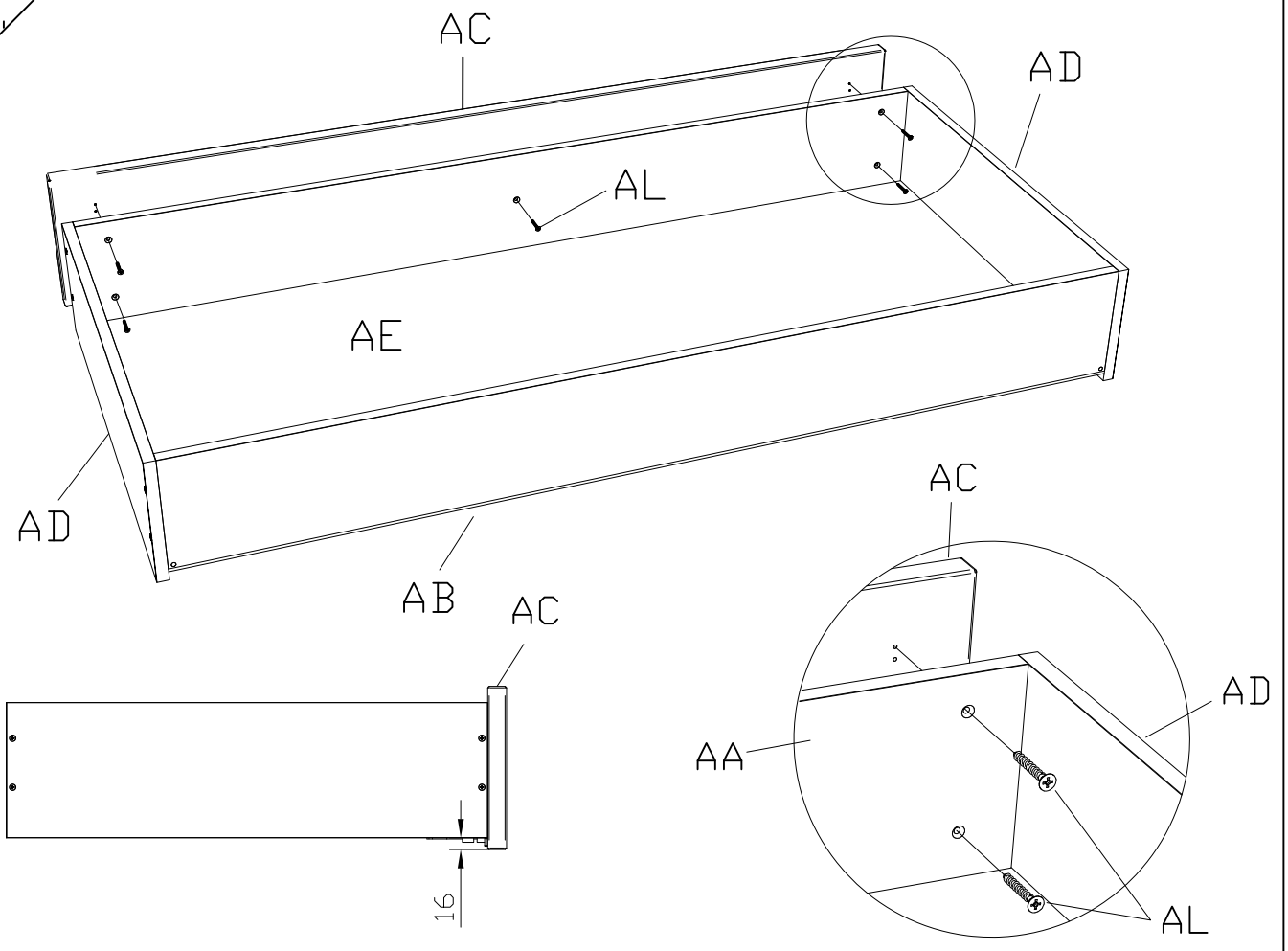

660.01251

16.

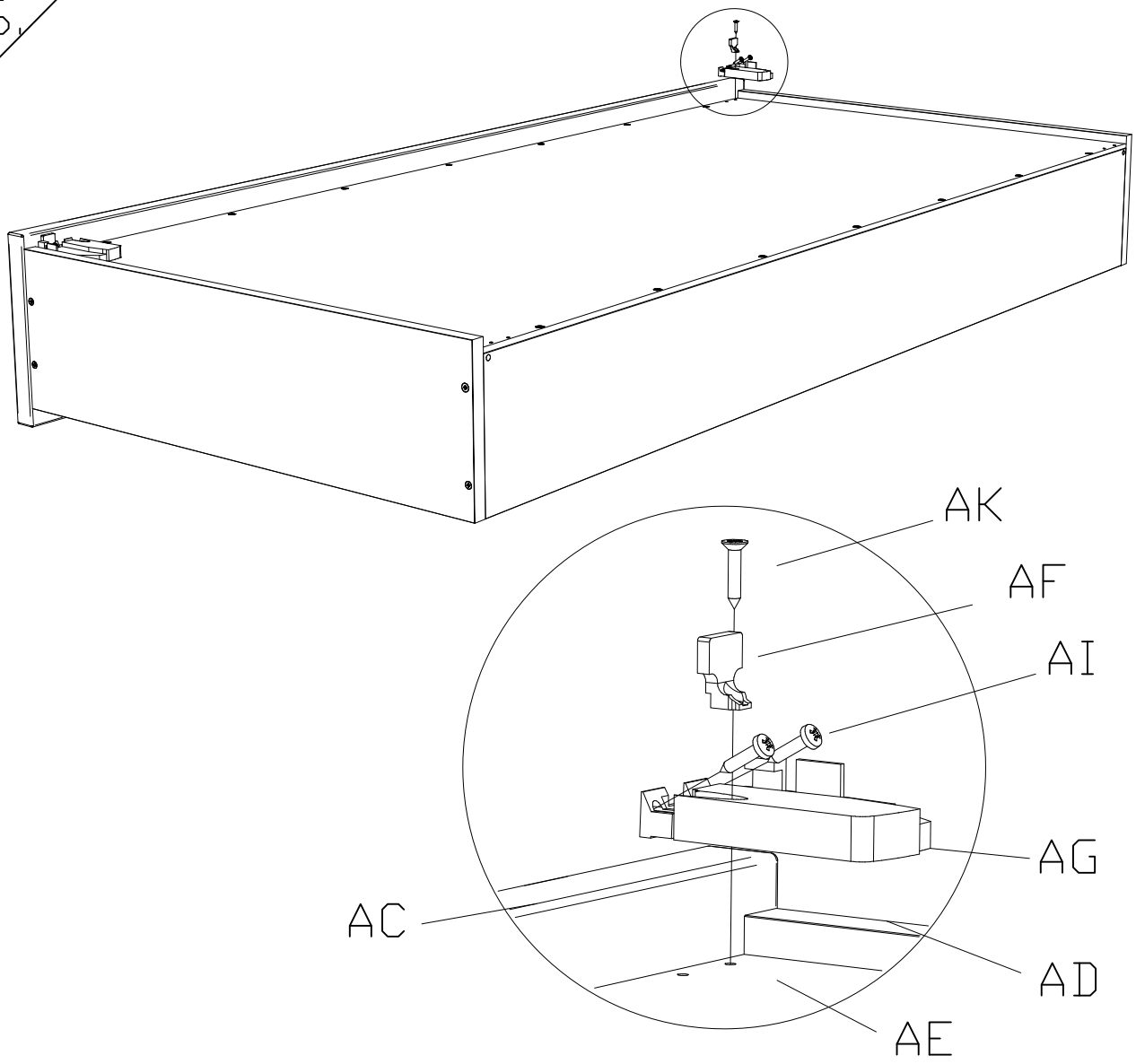

17.

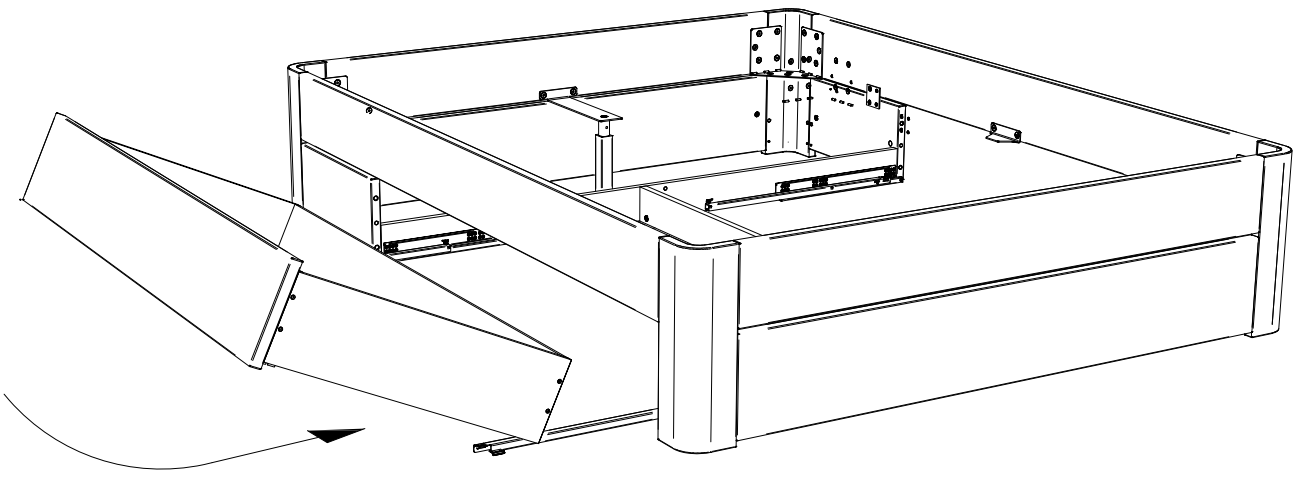

18.

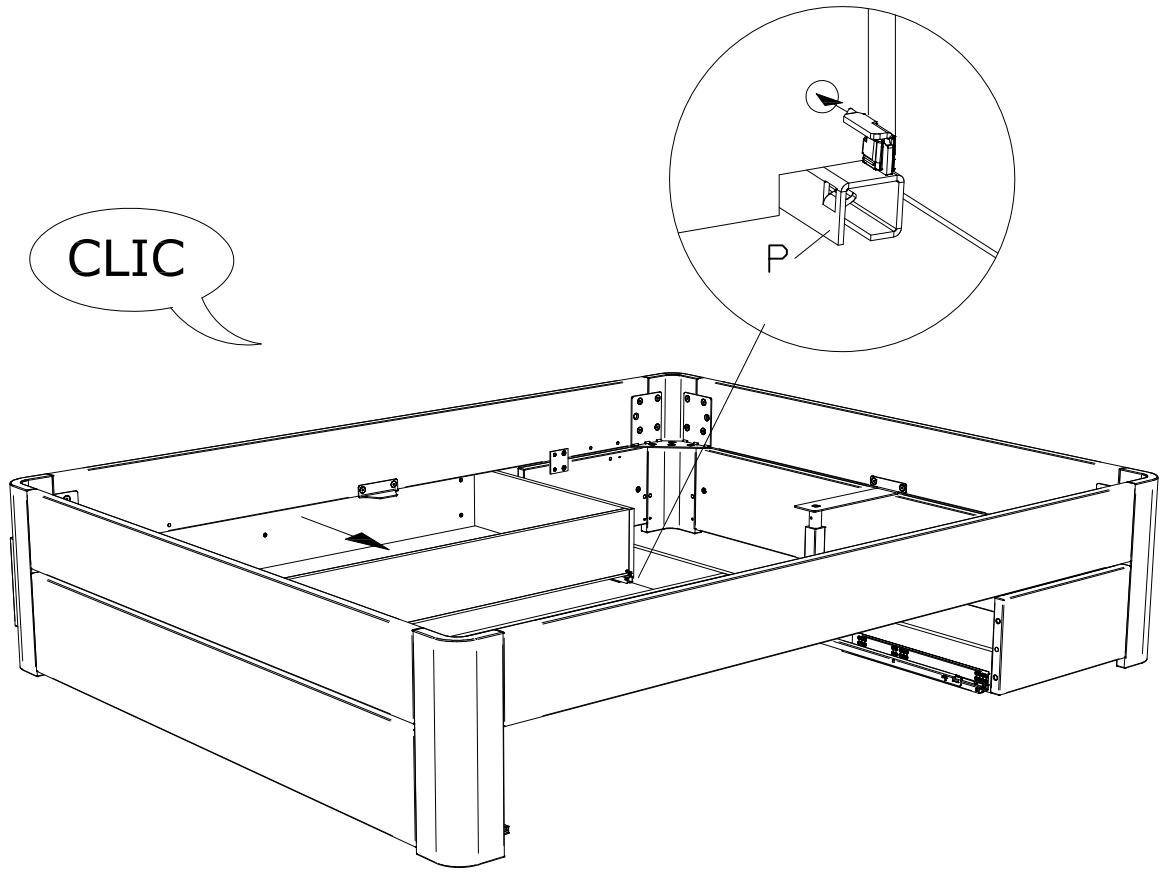

demontage / disassembly / démontage / smontaggio

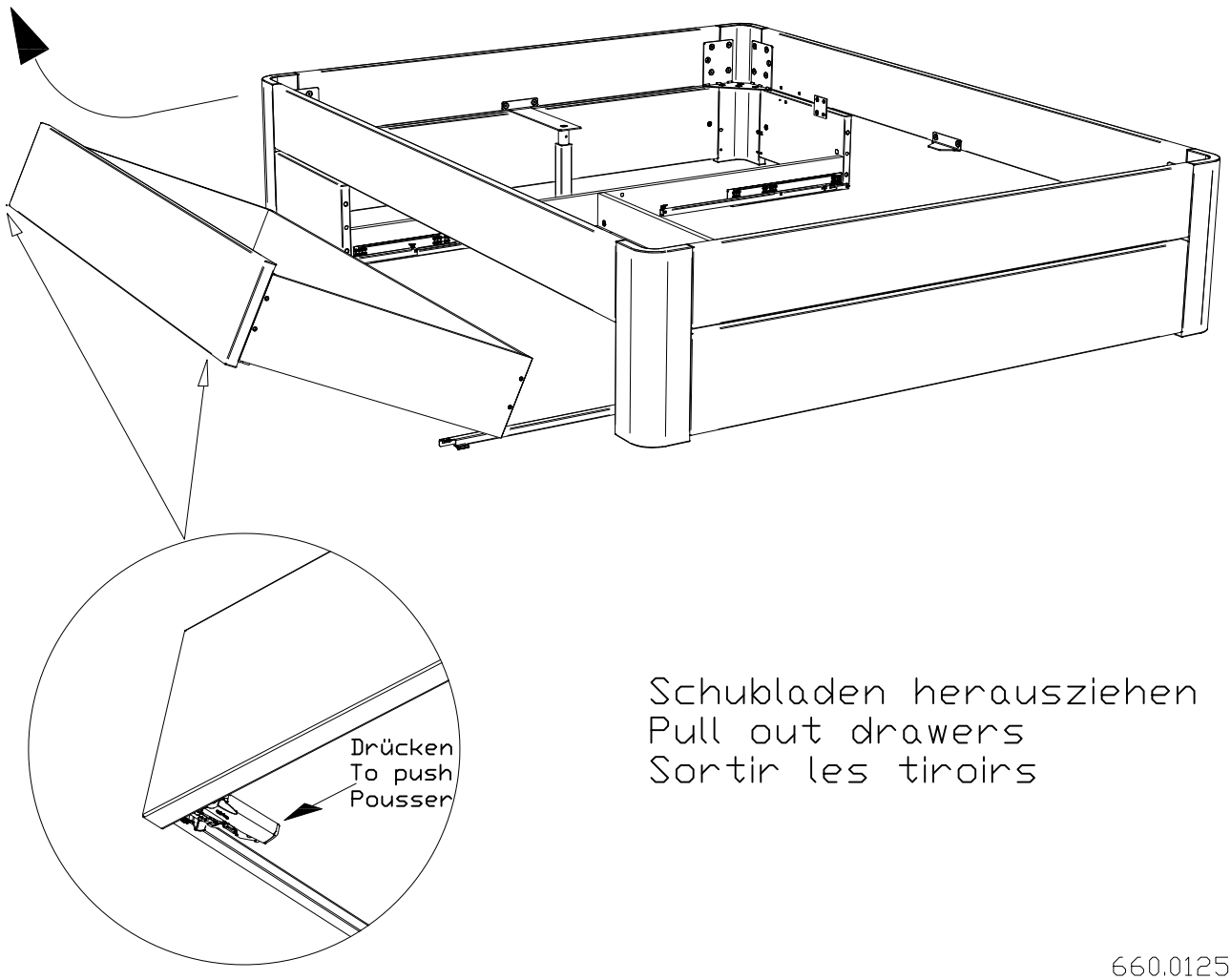

Schubladen herausziehen
Pull out drawers
Sortir les tiroirs

660.01251

AA ×1

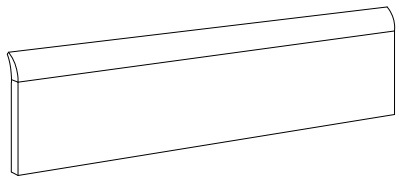

AB ×2



790.015

AC ×4

Ø5×25

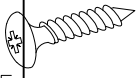

631.16500

AD ×2

M8×25

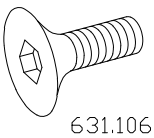

631.10600

AE ×2

Ø5×25

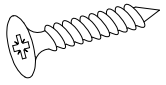

631.32100

AF ×2

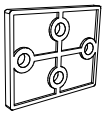

630.767

1.

2.

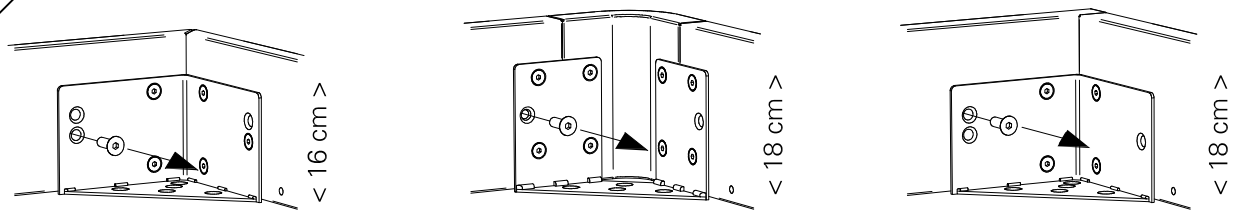

3.

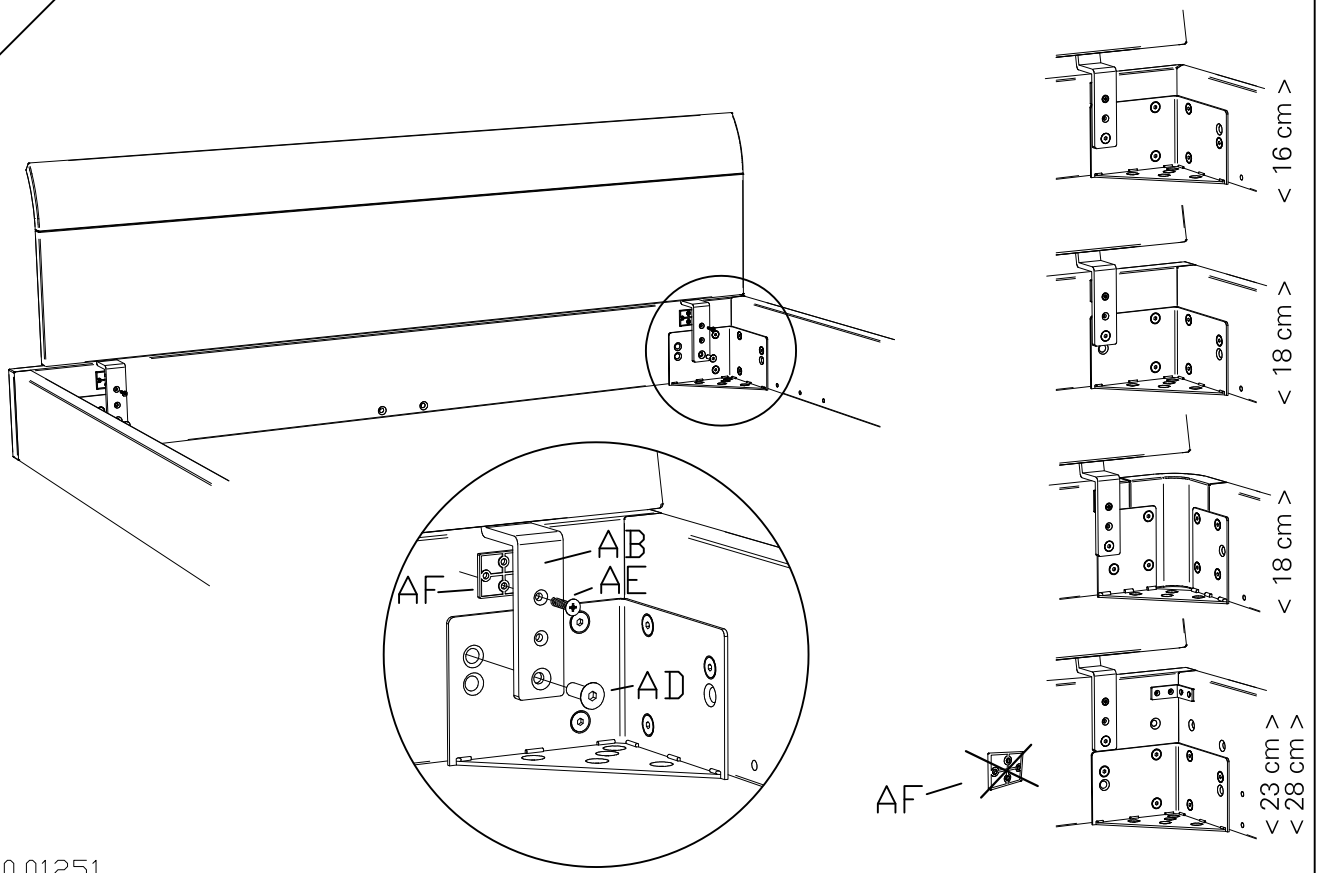

660.01251