swiss bed concept

MONTAGEANLEITUNG
NOTICE DE MONTAGE
ASSEMBLY INSTRUCTION
ISTRUZIONE DI MONTAGGIO

HASENA
the dream factory

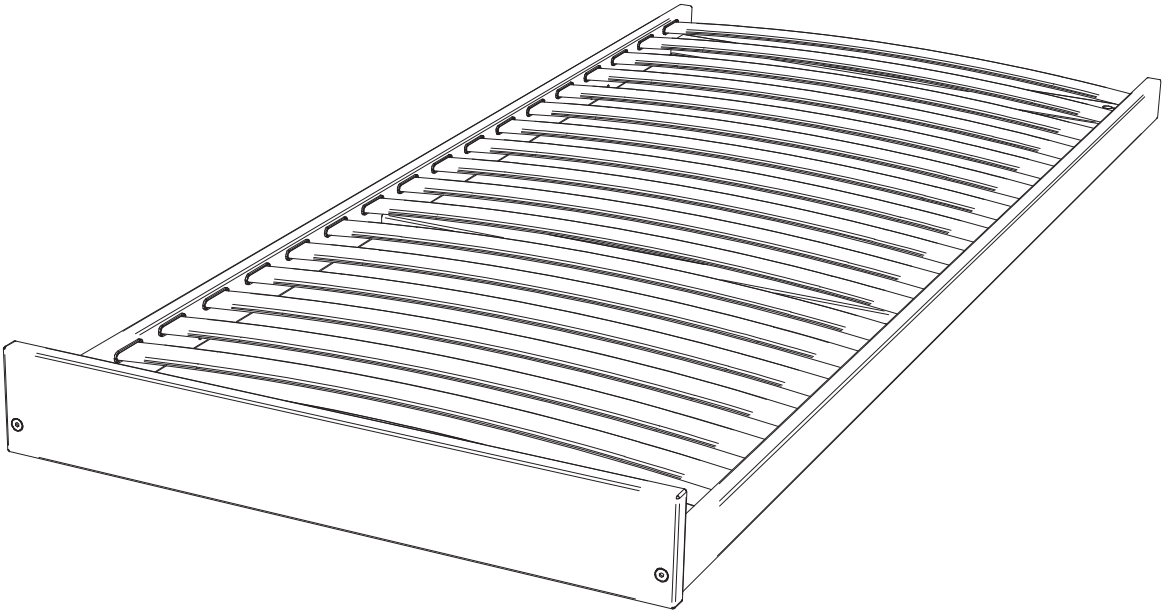

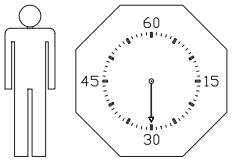

02.02.2023

660.00659

A ×1	B ×2	C ×2	D ×1
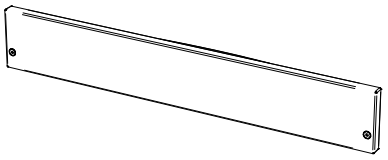	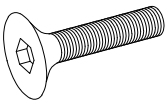 631.10400	 631.61100	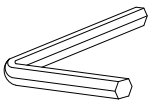 631.10000

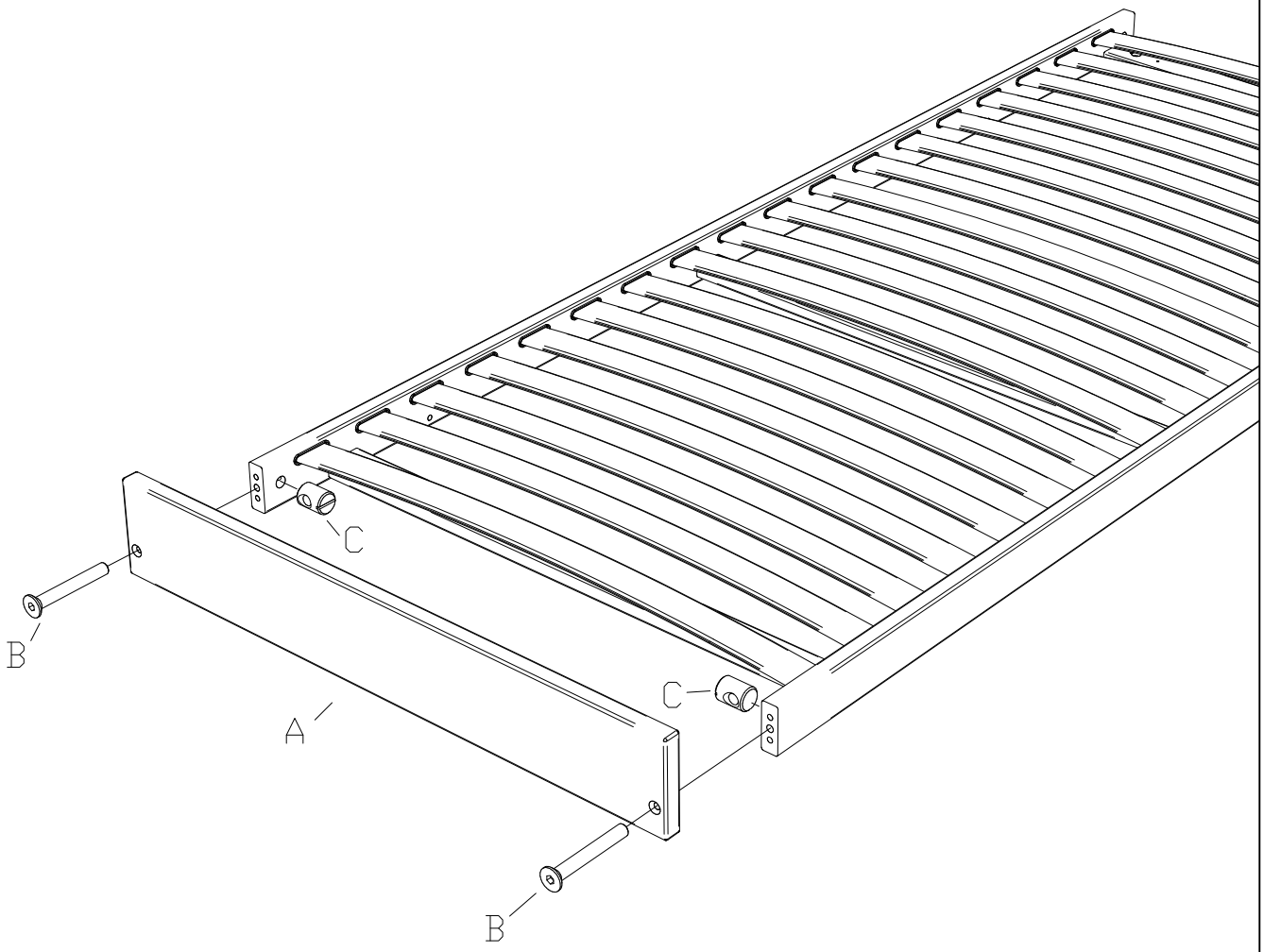

660.00659