swiss bed concept

MONTAGEANLEITUNG
NOTICE DE MONTAGE
ASSEMBLY INSTRUCTION
ISTRUZIONE DI MONTAGGIO

HASENA
the dream factory

Sansano

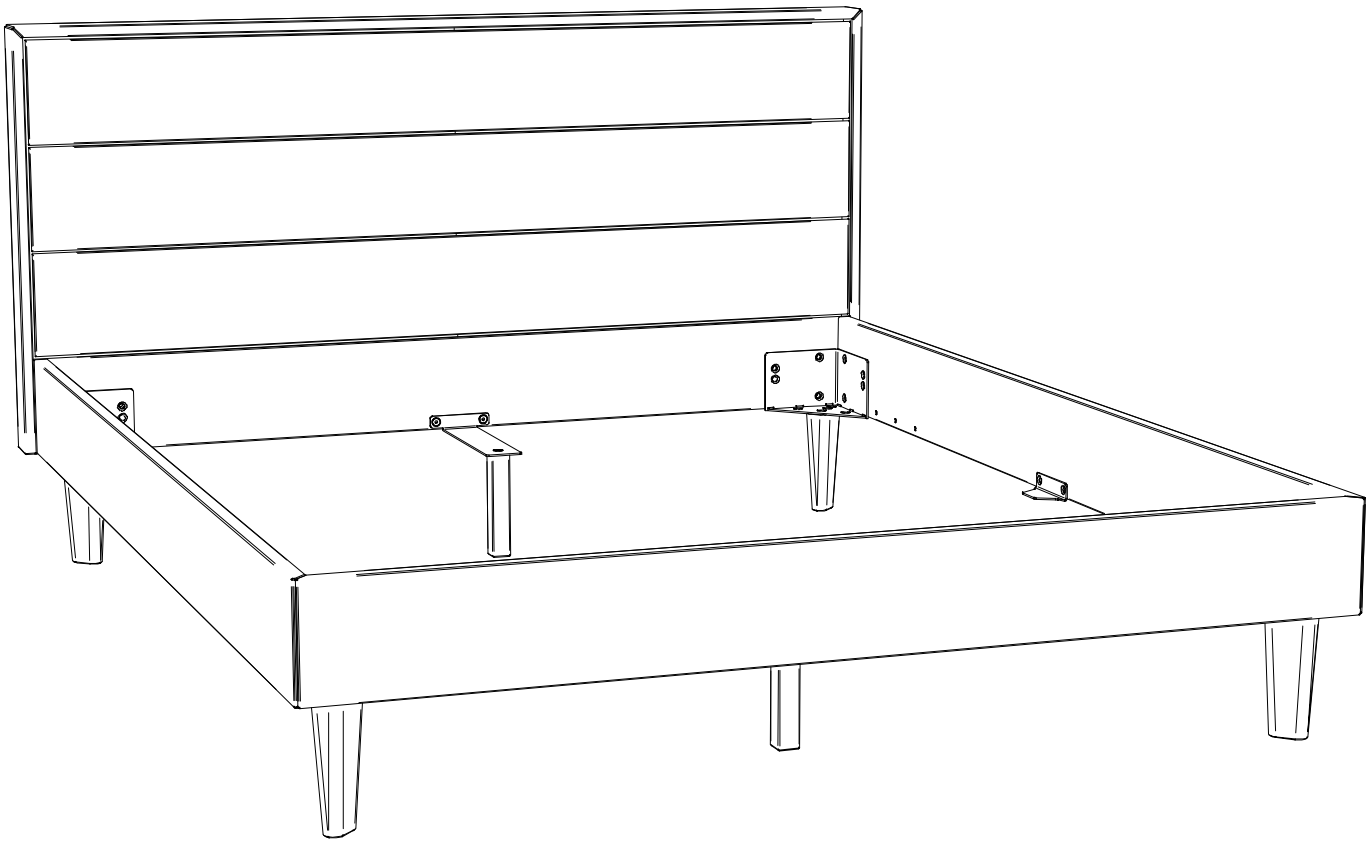

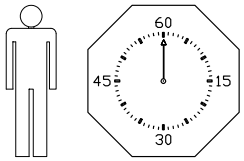

12.05.2026

660.01467

A ×1

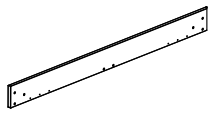

749.713

B ×1

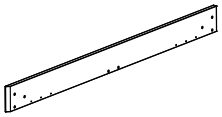

749.712

C ×1

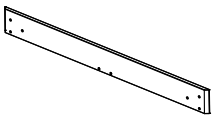

749.366-.368

D ×1

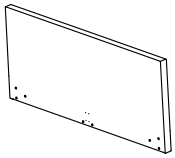

E ×4

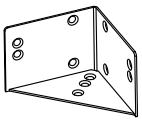

630.101

F ×28

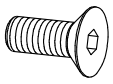

631.872

G ×2

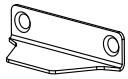

630.099

Z ×1



631.10000

1.

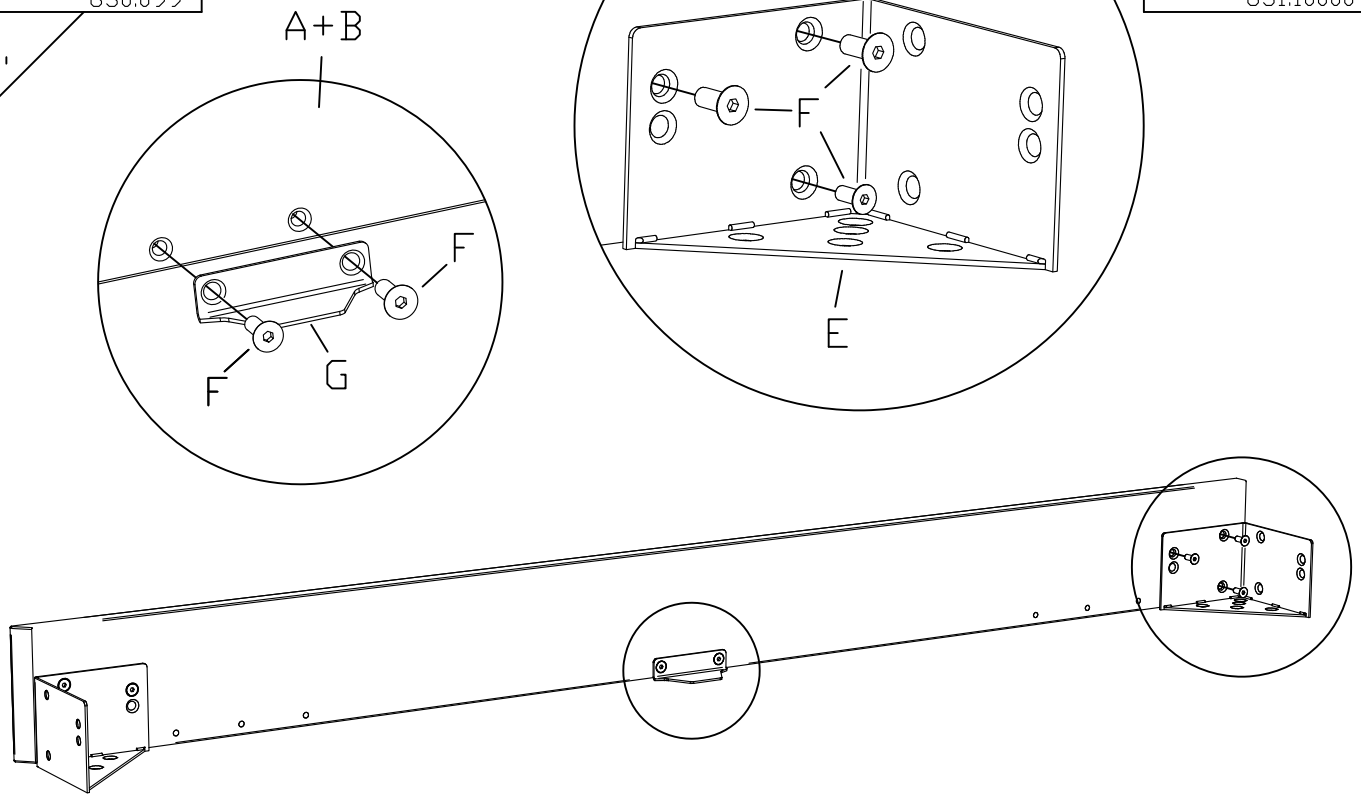

2.

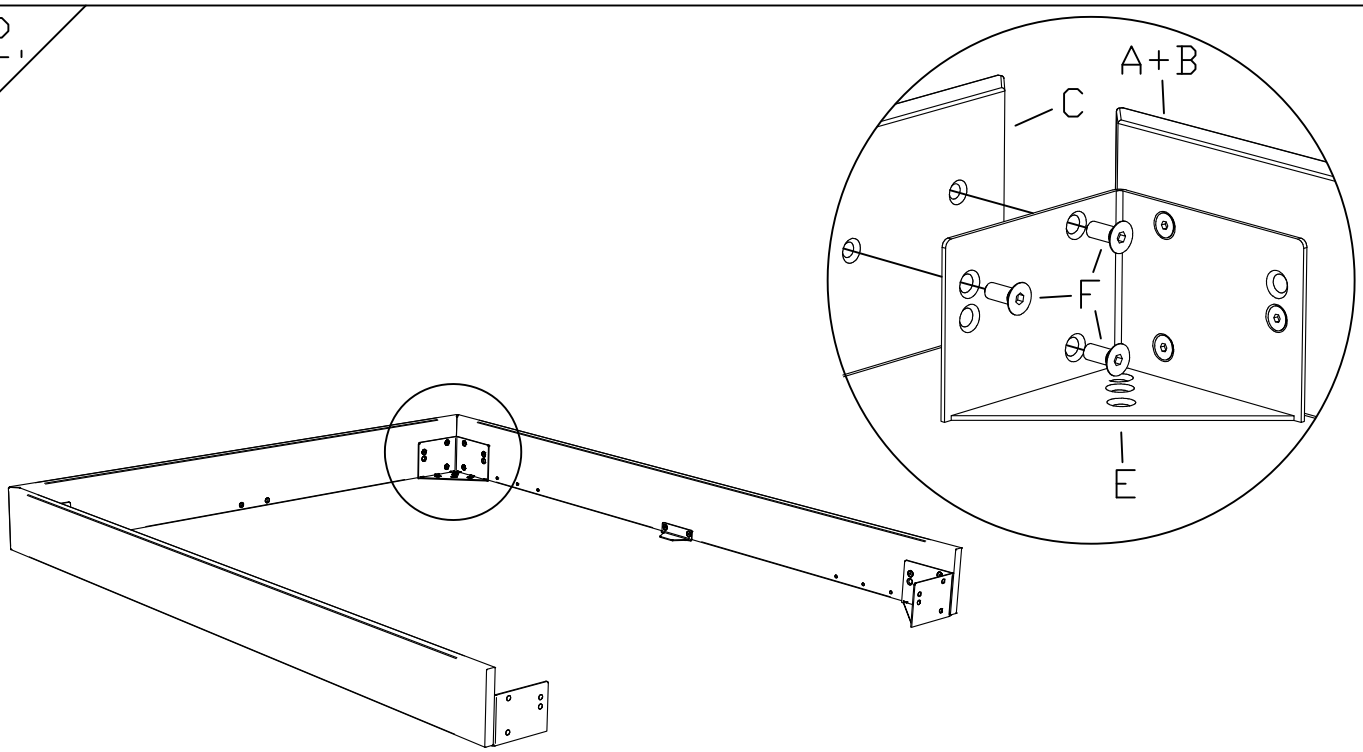

660.01467

3.

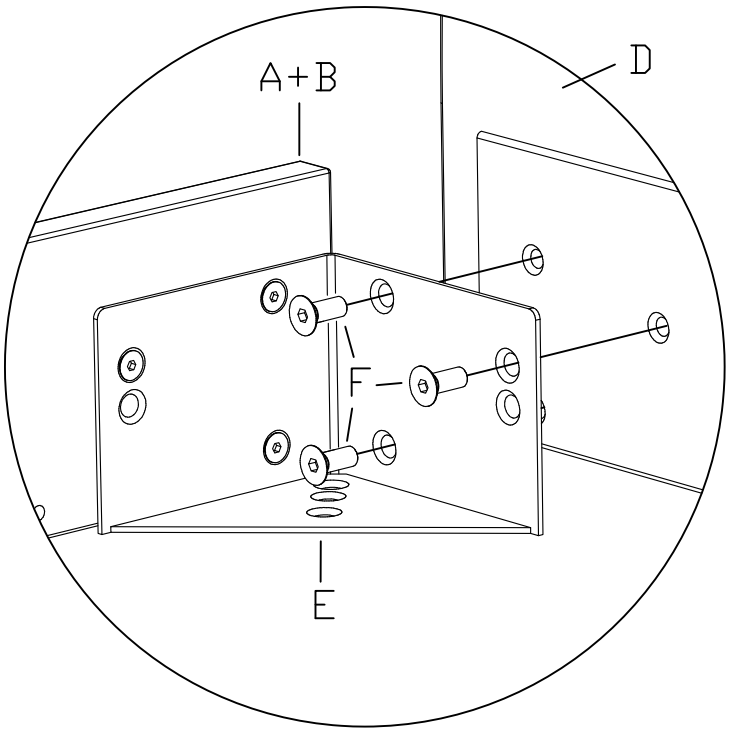

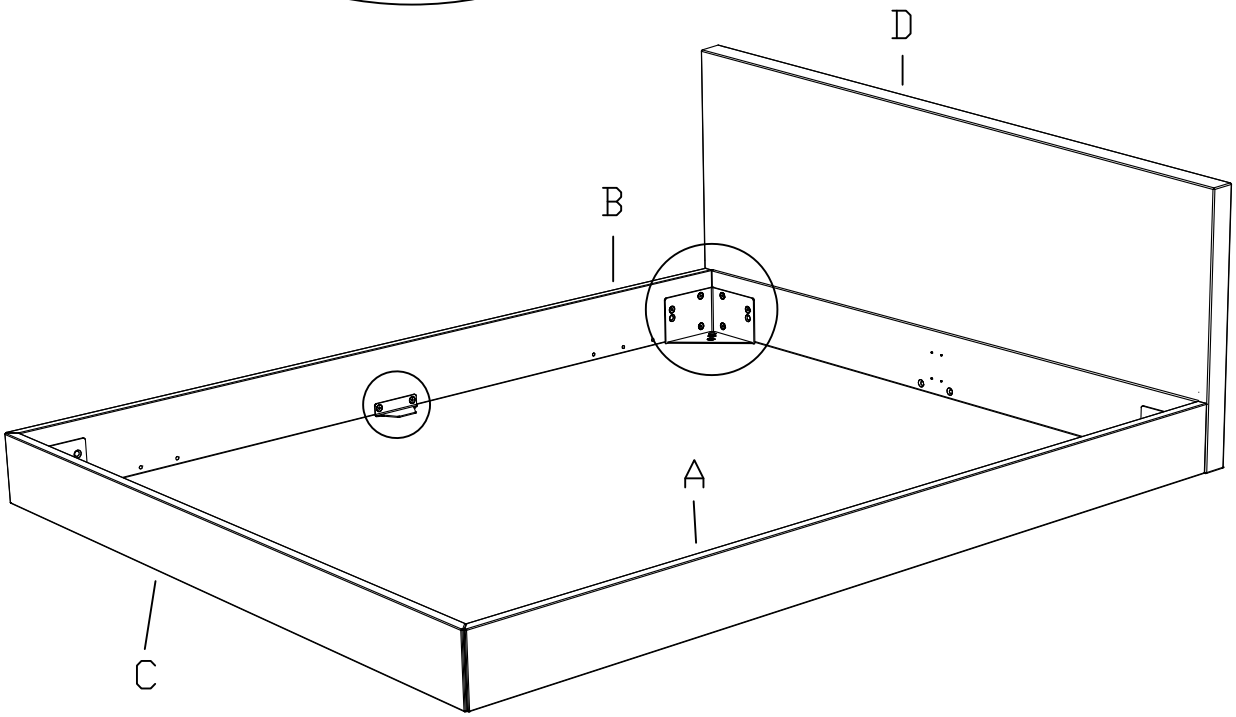

H x4



F x8
M8x20

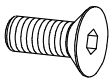

631.872

4.

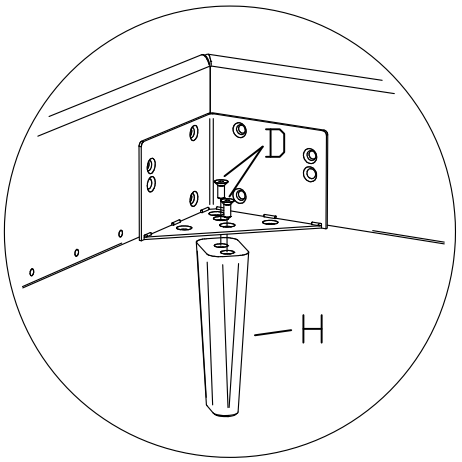

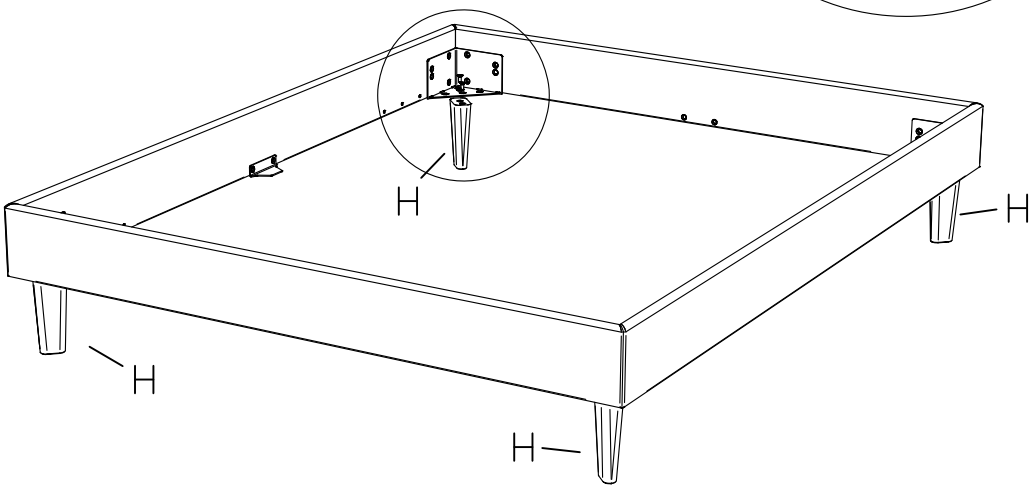

zusätzlich bei Breiten ab 160cm
additional for widths from 160cm
à partir des dimensions 160cm
a partire della misura 160cm

I x2

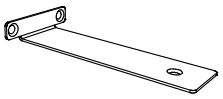

790.023

K x2

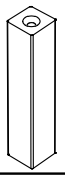

F x6
M8x20

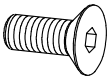

631.872

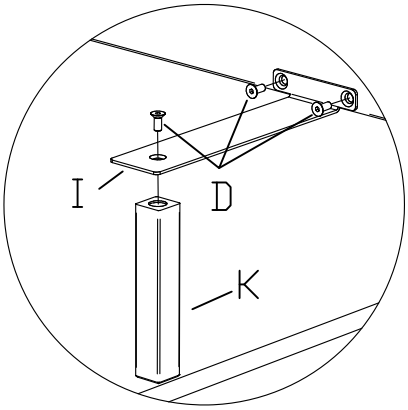

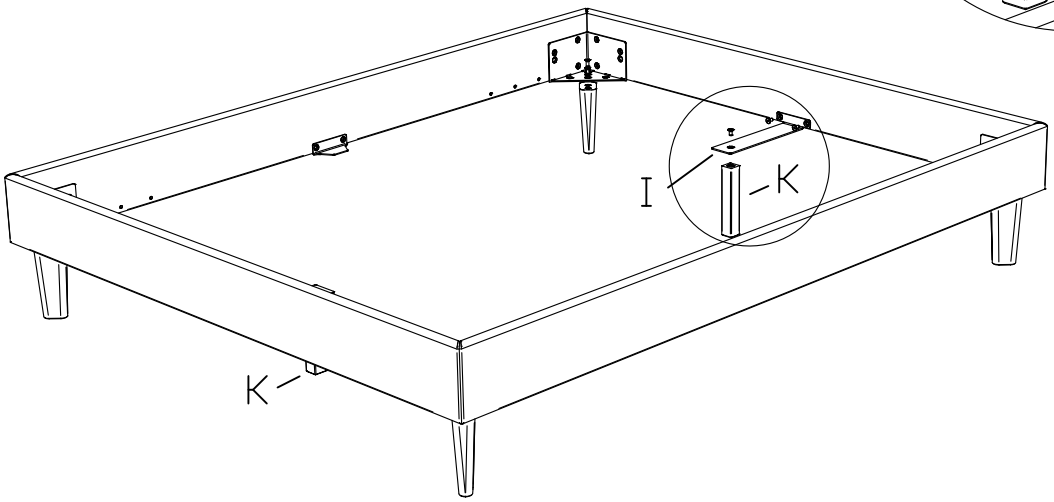

660.01467

zusätzlich bei Fusshöhe 25cm
additional for foot height 25cm
en plus pour les hauteur de pied 25cm
supporti addizionali per piedi di 25cm

25cm = 5cm Adapter



793.290

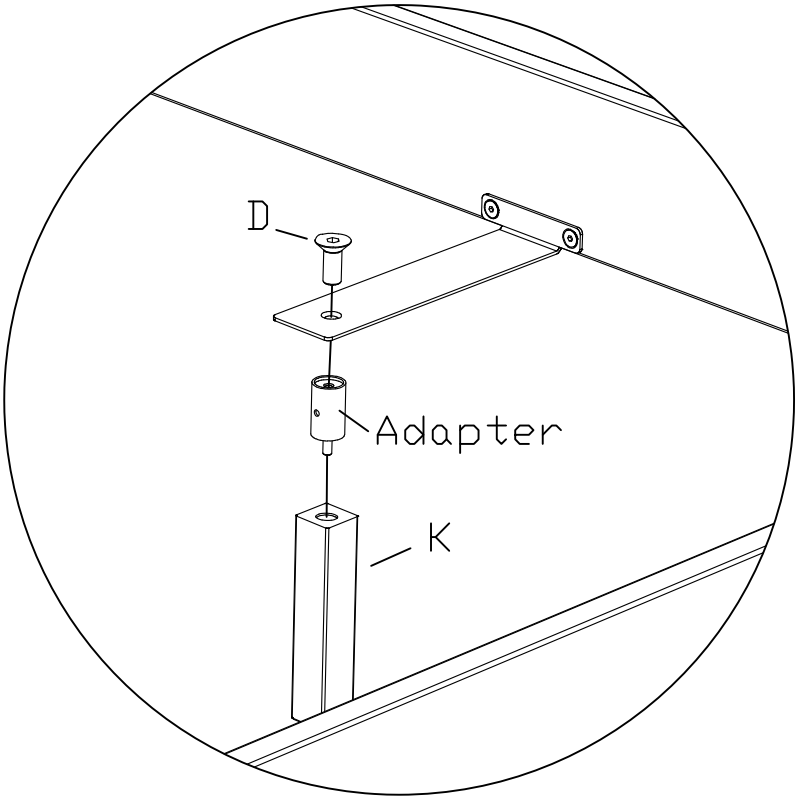

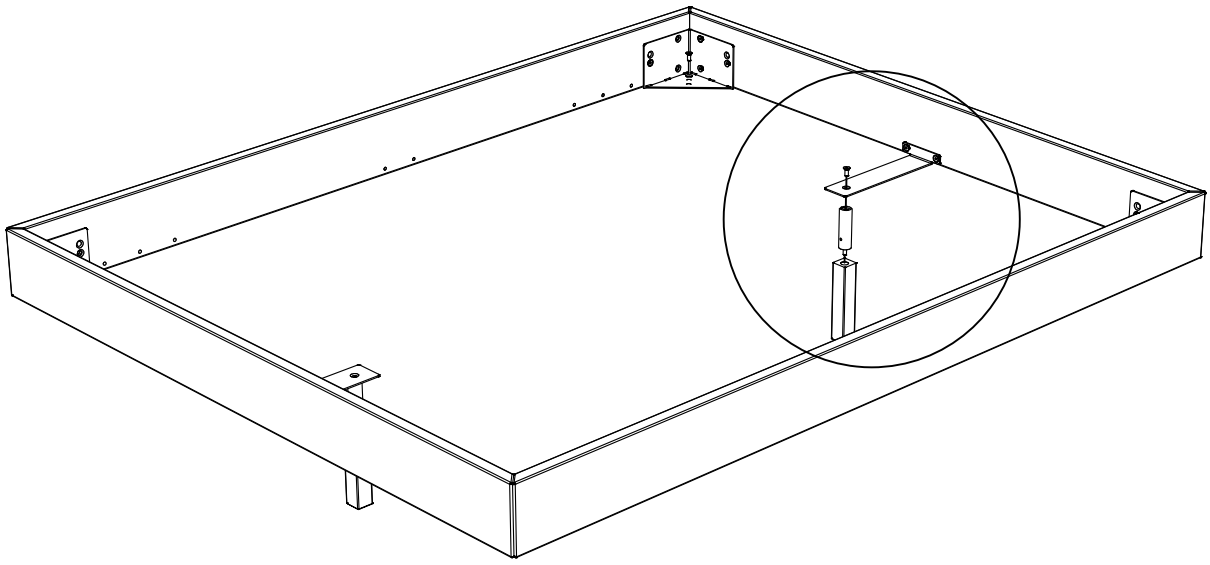

660.01467

Option Luce

G x1

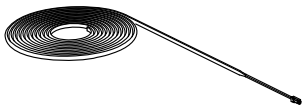

H x2

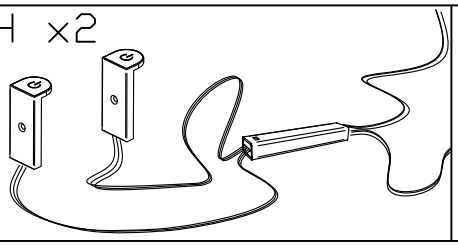

I x1

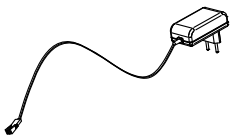

K x2
Ø3.5x20

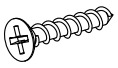

631.30000

5.

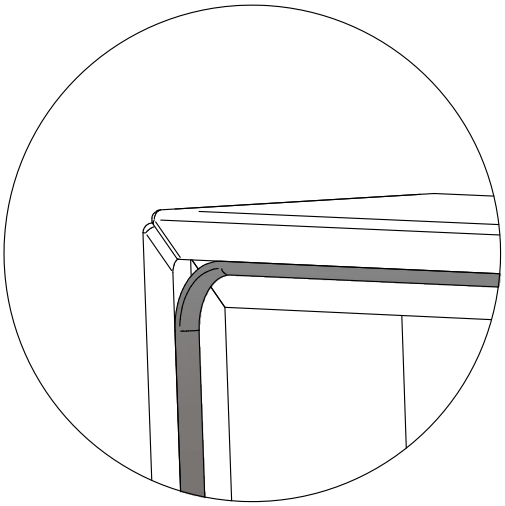

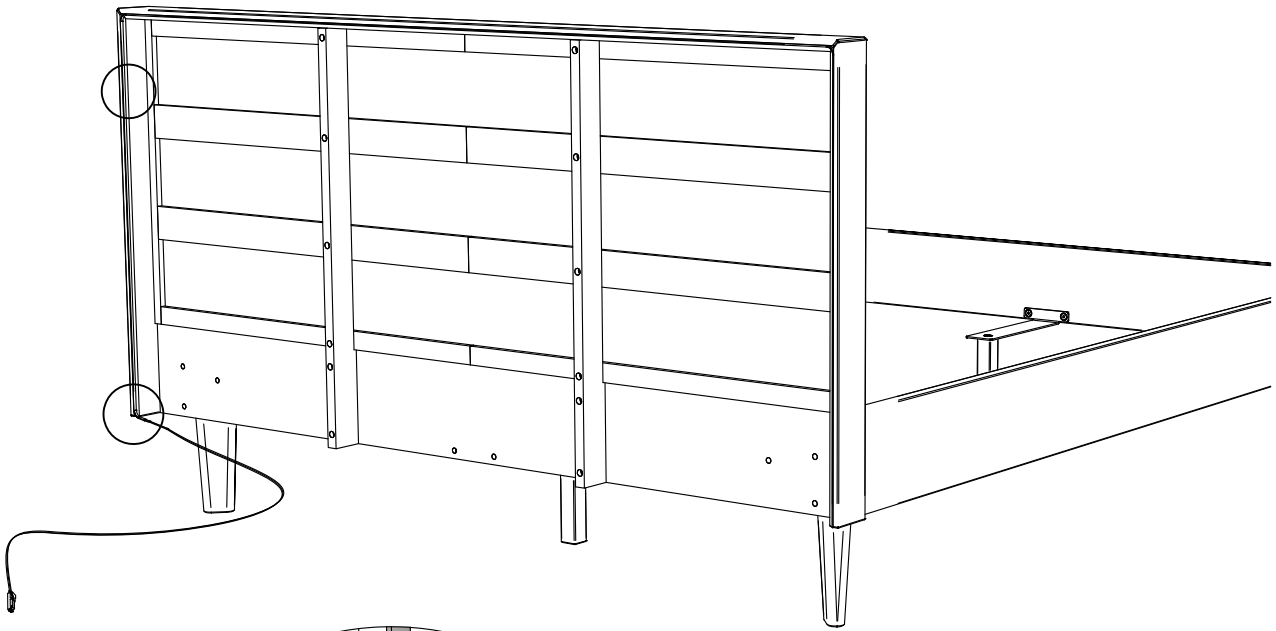

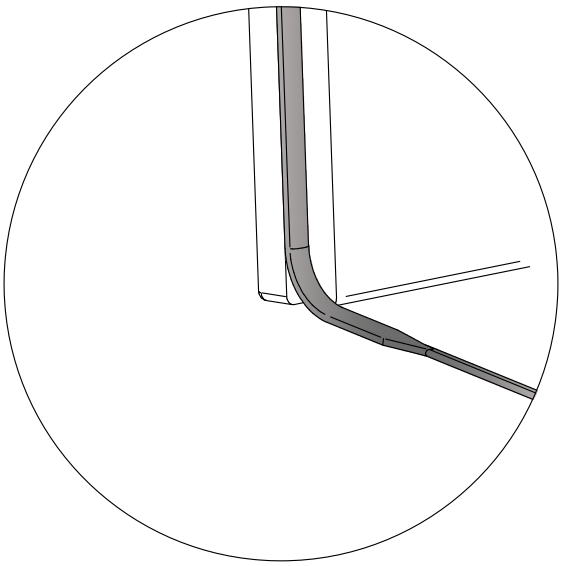

660.01467

6.

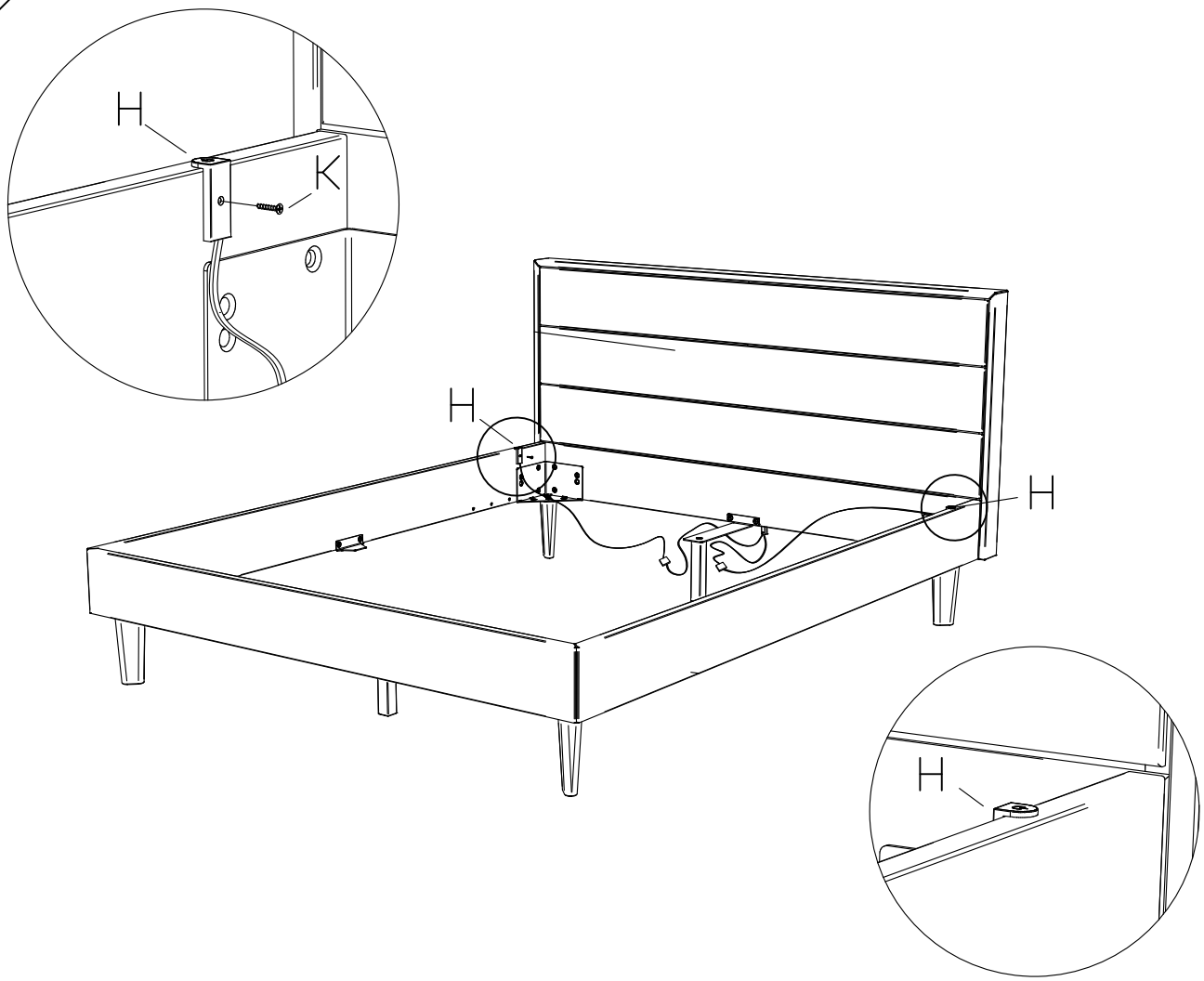

7.

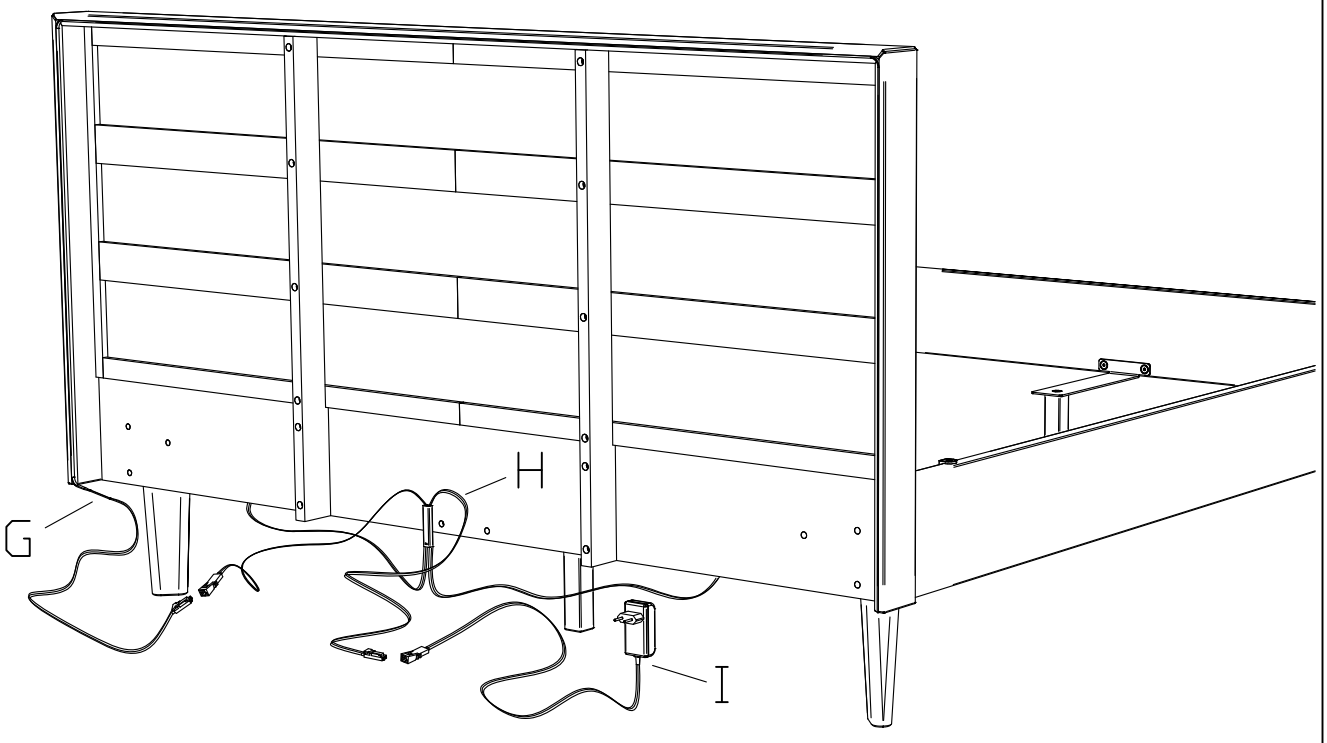

660.01467

Länge/Postion LED-Stripe
Longueur / Position du ruban LED
Length / Position of the LED strip
Lunghezza / Posizione della striscia LED

Breite / Largeur / width / Larghezza 140
LED-Stripe auf Länge zuschneiden
Couper la bande LED à la longueur souhaitée
Cut LED strip to length
Tagliare la striscia LED alla lunghezza desiderata

