swiss bed concept

MONTAGEANLEITUNG
NOTICE DE MONTAGE
ASSEMBLY INSTRUCTION
ISTRUZIONE DI MONTAGGIO

HASENA
the dream factory

Mirco

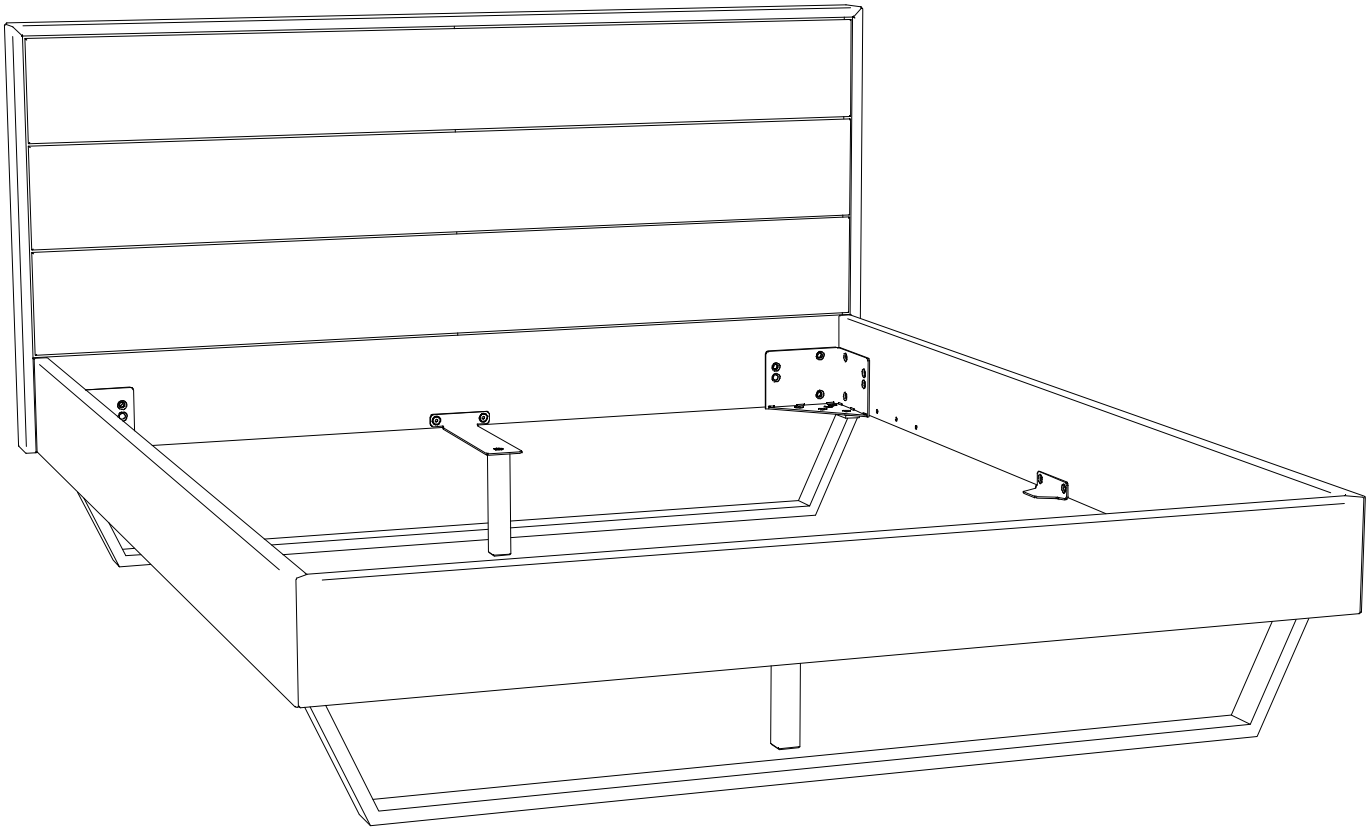

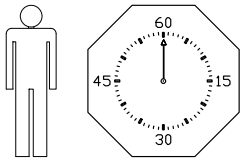

12.05.2026

660.01468

A x1

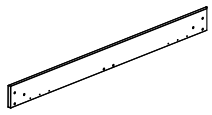

749.713

B x1

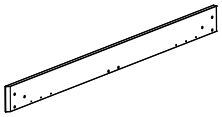

749.712

C x1

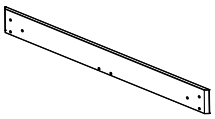

749.366-.368

D x1

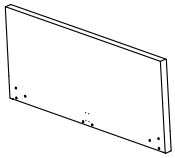

E x4

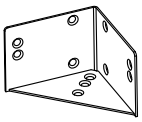

630.101

F x28

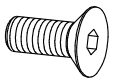

631.872

G x2

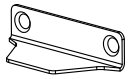

630.099

Z x1



631.10000

1.

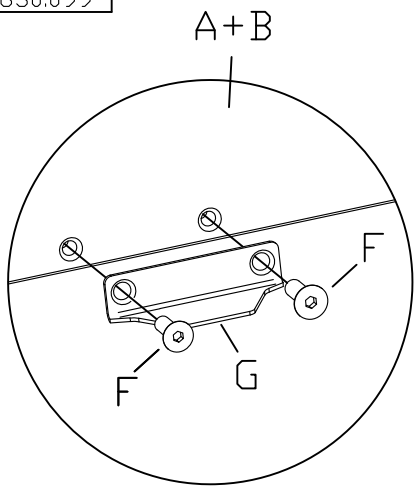

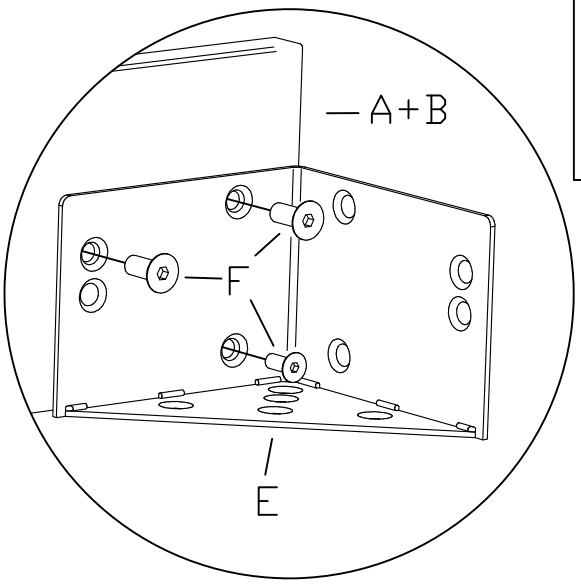

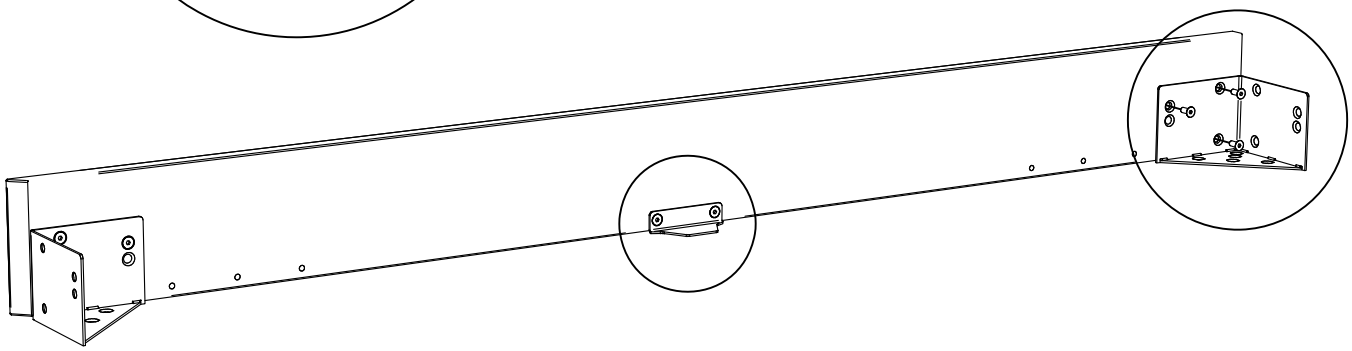

2.

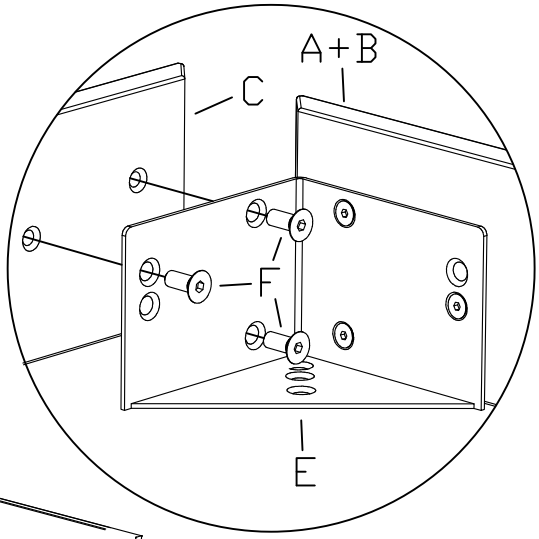

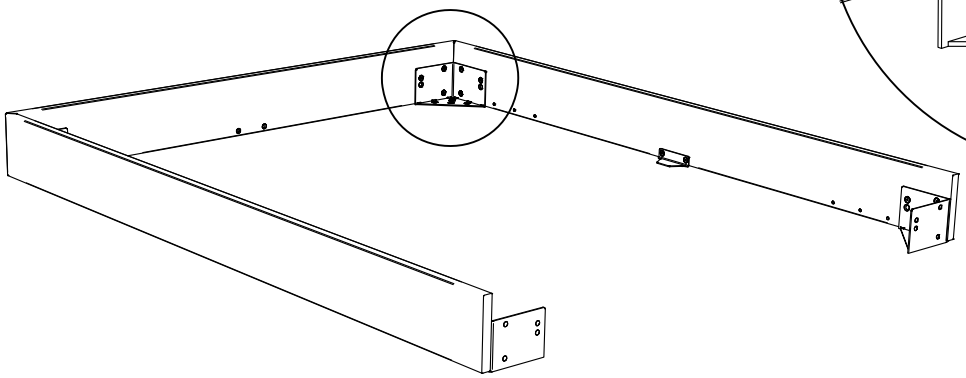

660.01468

3.

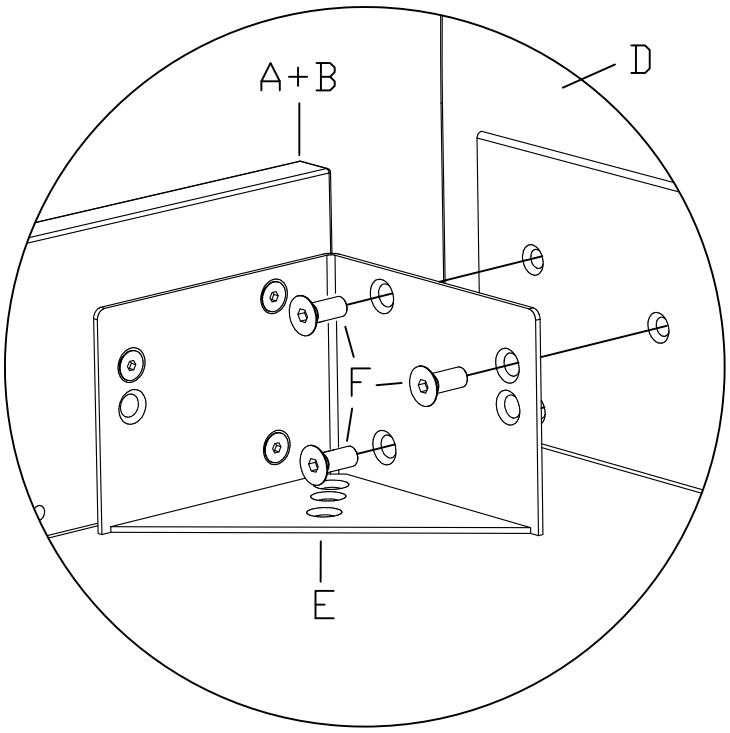

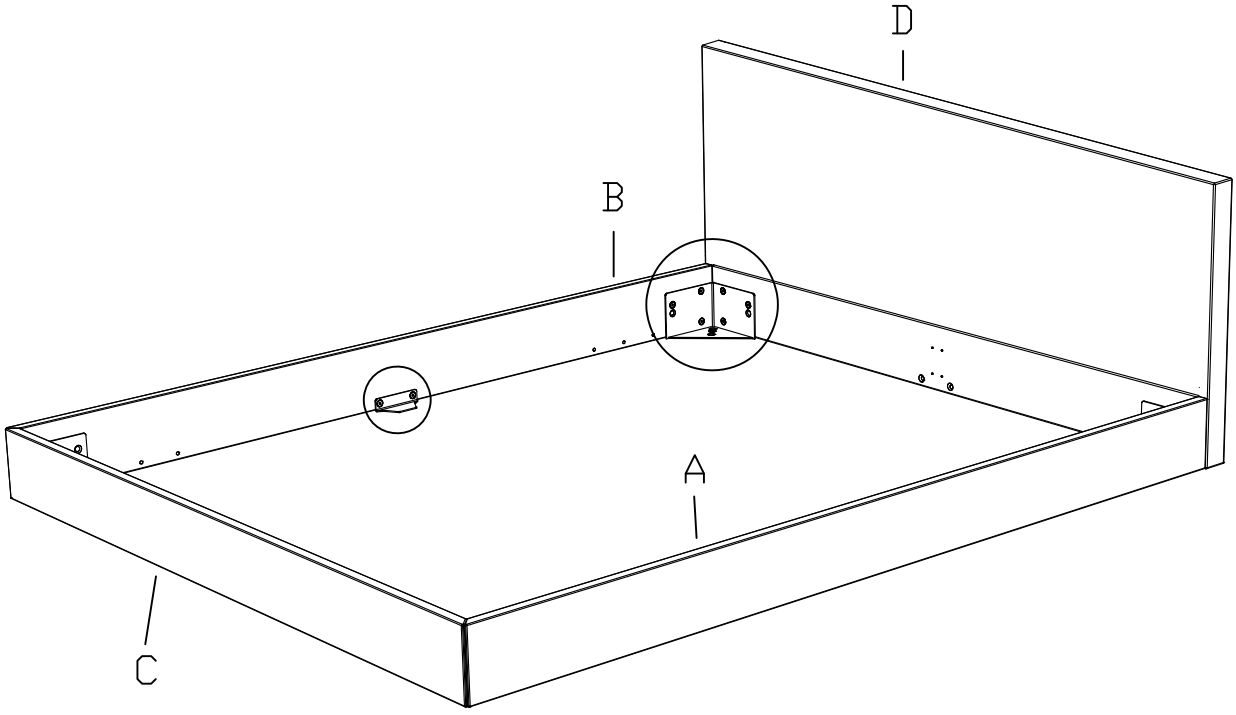

660.01468

H x2

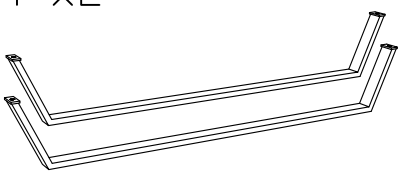

F x4

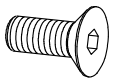

631.872

4.

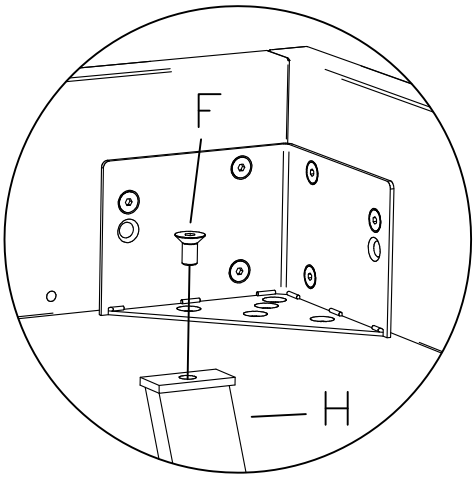

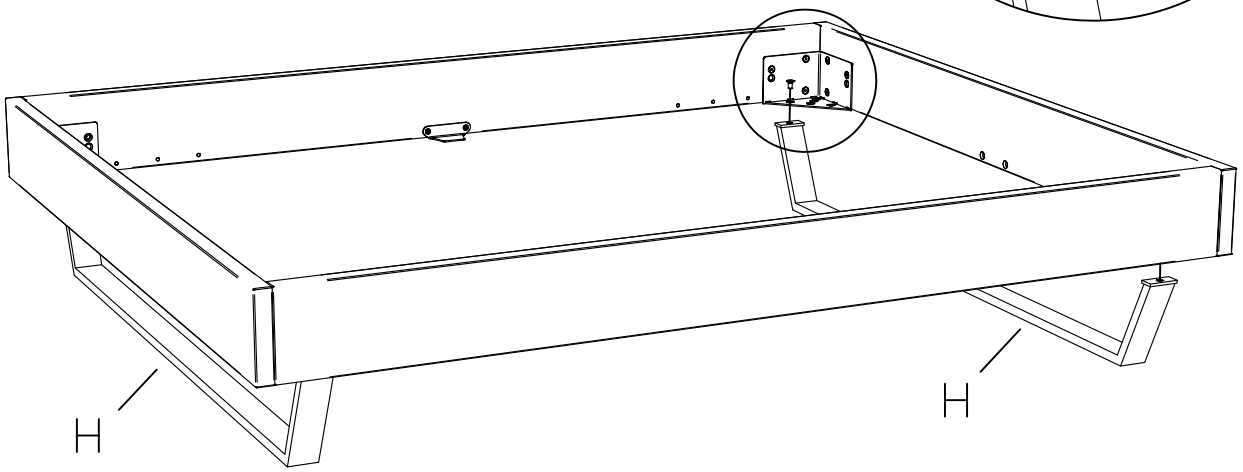

zusätzlich bei Breiten ab 160cm
additional for widths from 160cm
à partir des dimensions 160cm
a partire della misura 160cm

I x2

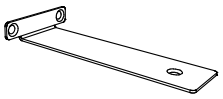

790.023

K x2

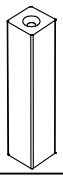

F x6

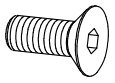

631.872

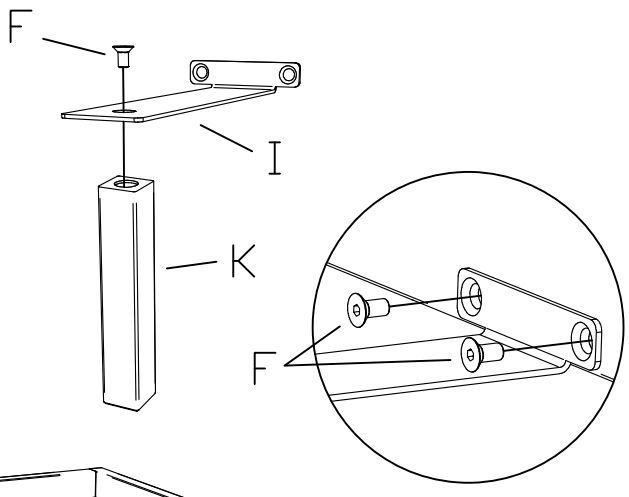

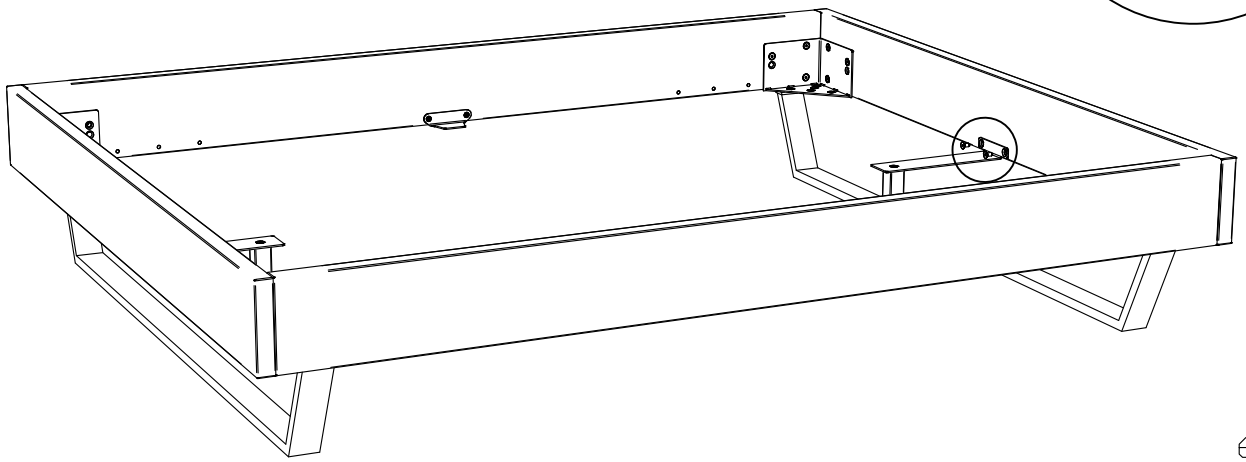

660.01468

zusätzlich bei Fusshöhe 25cm
additional for feed height 25cm
en plus pour les hauteur de pieds 25cm
supporti addizionali per piedi di 25cm

I x2	K x2	F x6	L x2
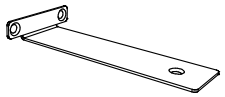 790.023	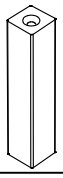	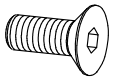 631.872	 793.290

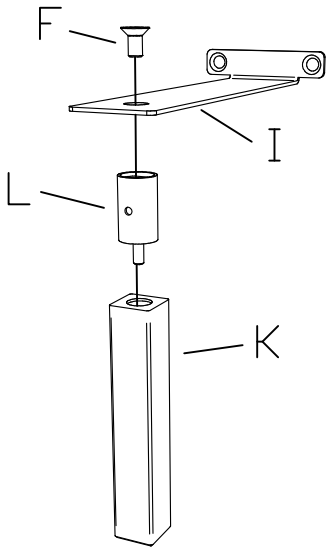

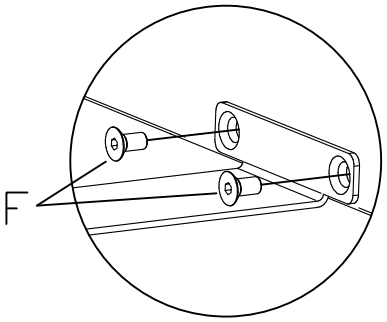

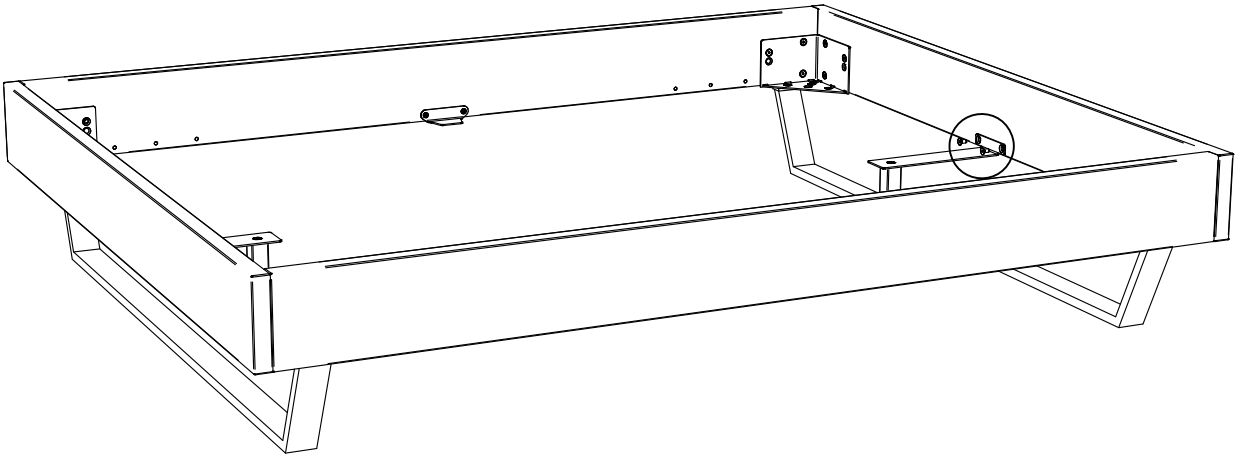

660.01468

Option Luce

M x1

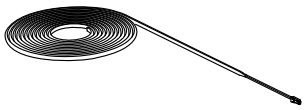

O x2

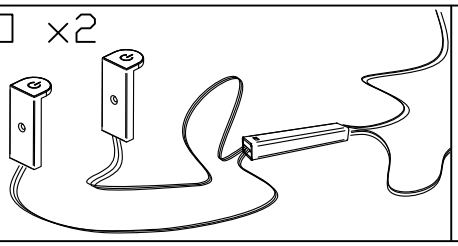

P x1

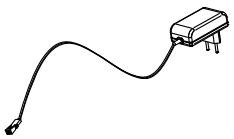

R x2
Ø3.5x20

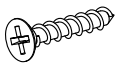

631.30000

5.

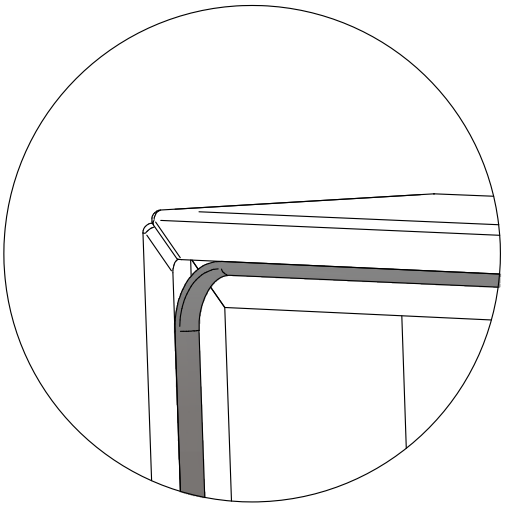

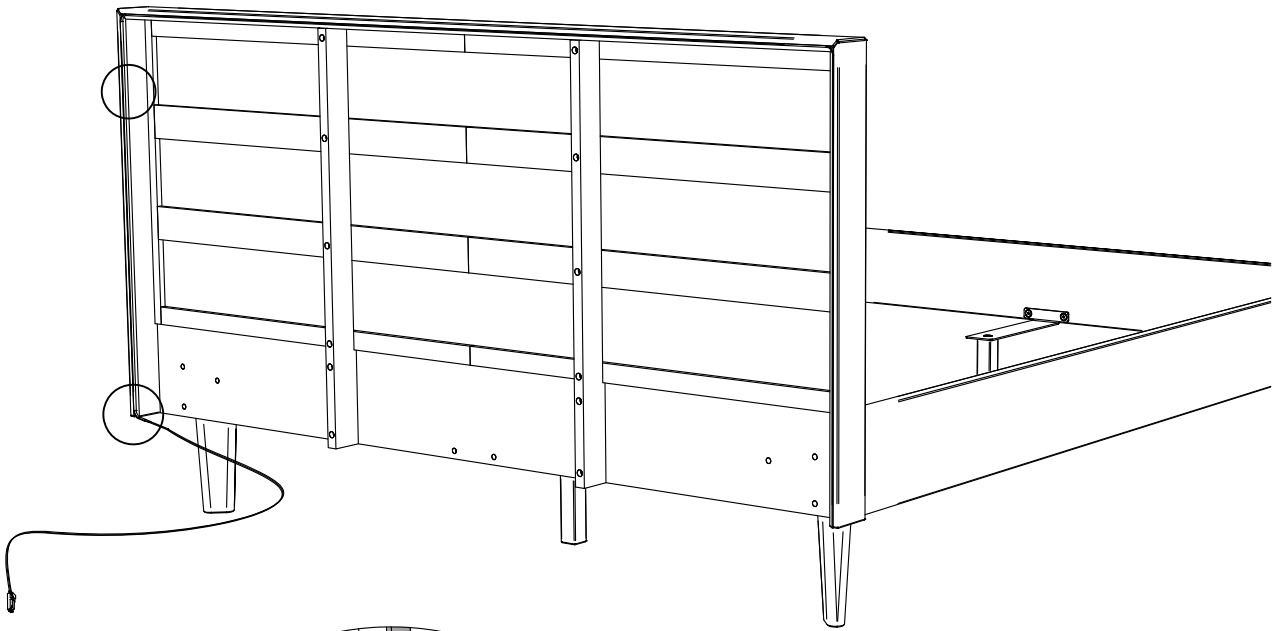

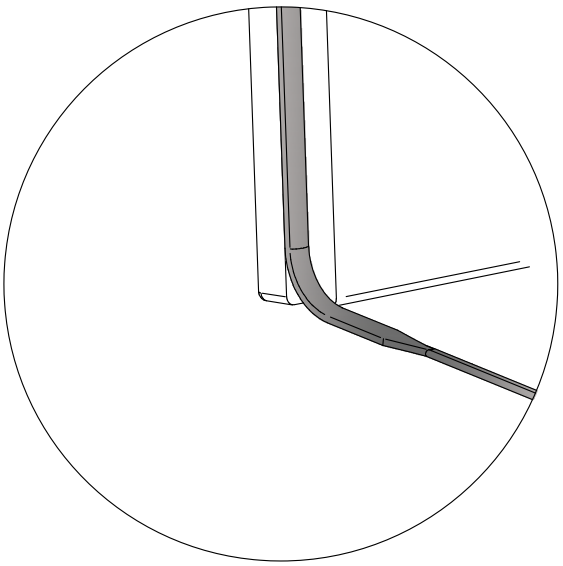

660.01468

6.

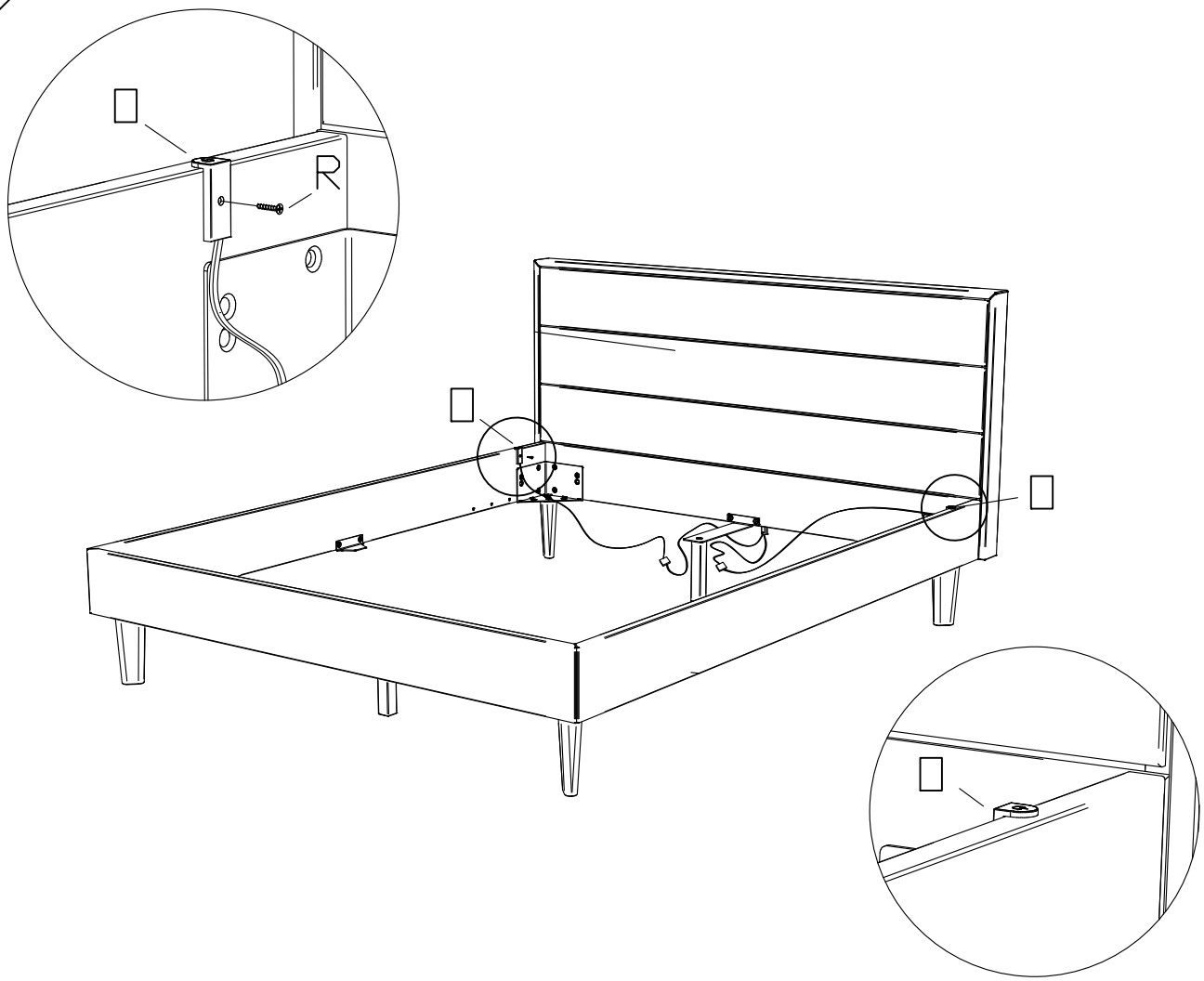

7.

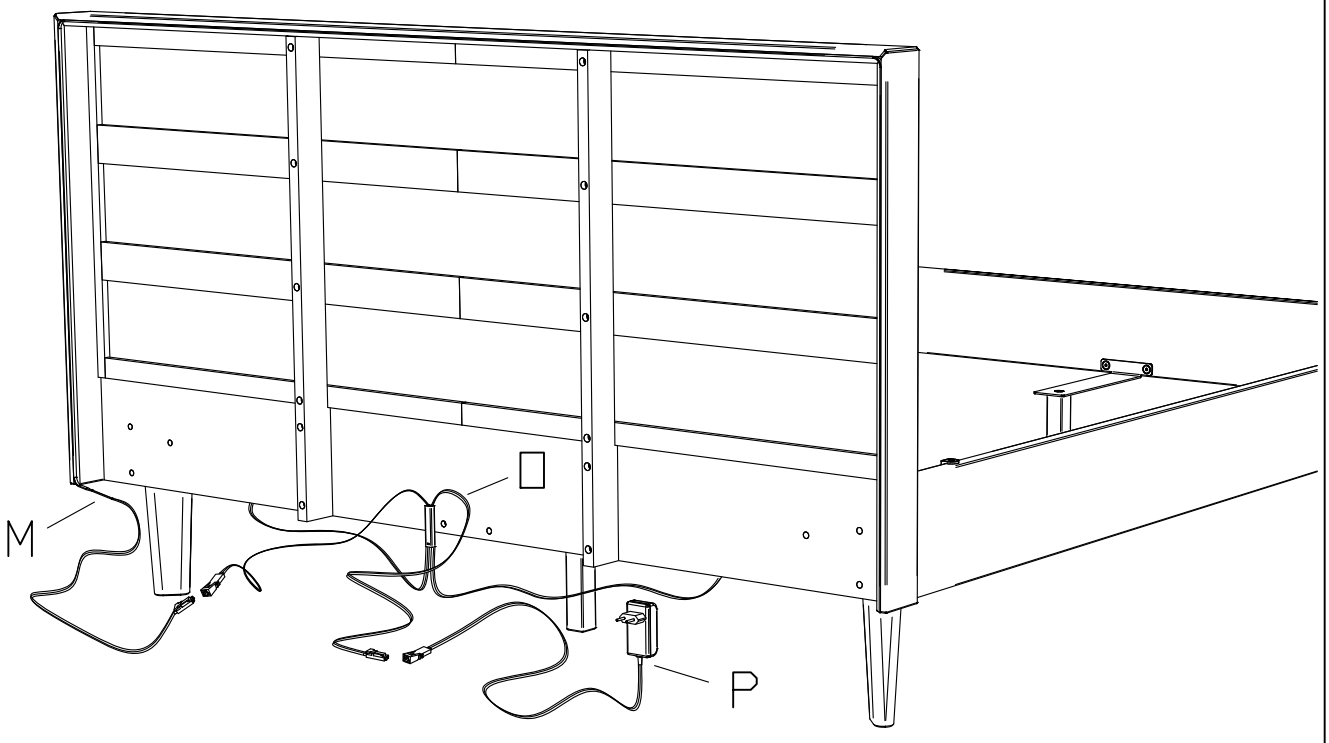

660.01468

8.

Länge/Postion LED-Stripe
Longueur / Position du ruban LED
Length / Position of the LED strip
Lunghezza / Posizione della striscia LED

Breite / Largeur / width / Larghezza 140
LED-Stripe auf Länge zuschneiden
Couper la bande LED à la longueur souhaitée
Cut LED strip to length
Tagliare la striscia LED alla lunghezza desiderata

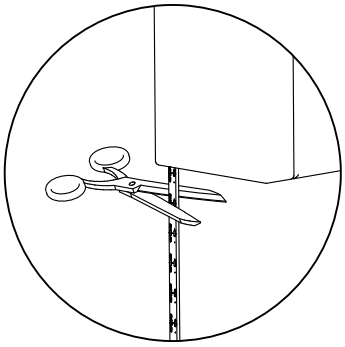

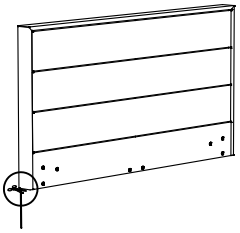

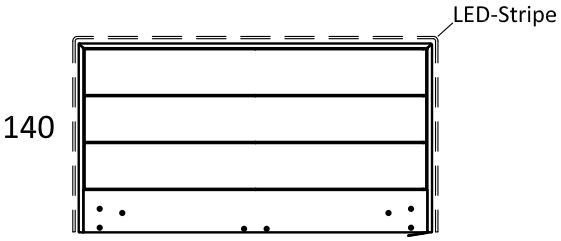

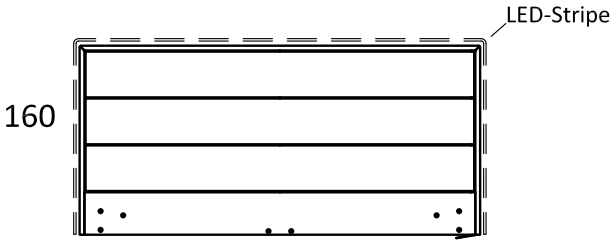

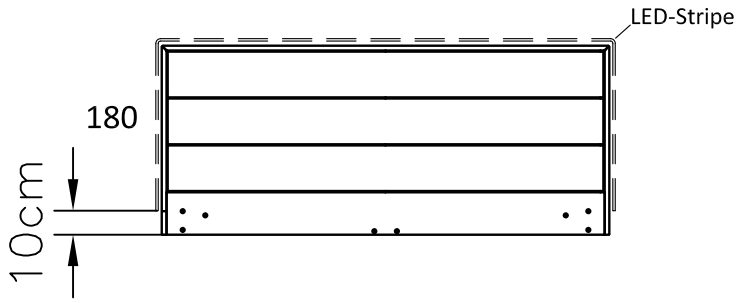

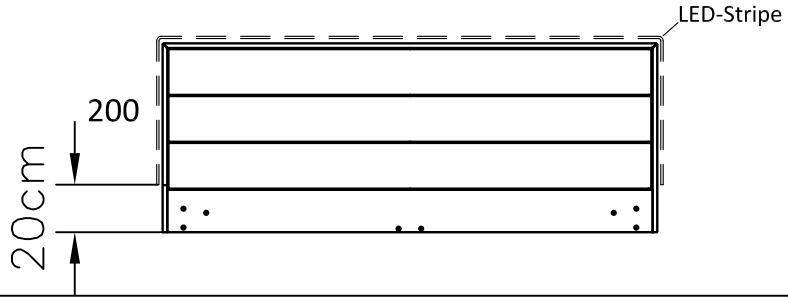

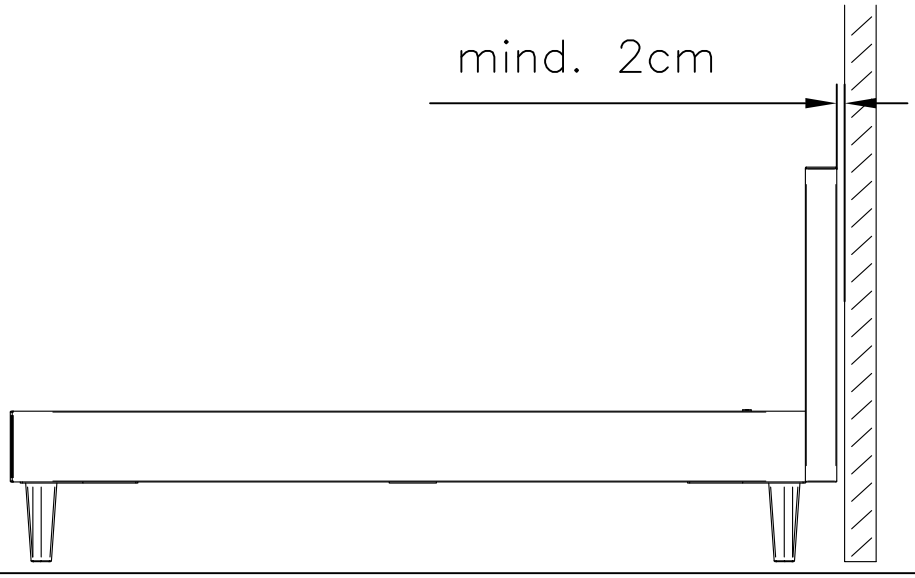

660.01468