swiss bed concept

MONTAGEANLEITUNG
NOTICE DE MONTAGE
ASSEMBLY INSTRUCTION
ISTRUZIONE DI MONTAGGIO

HASENA
the dream factory

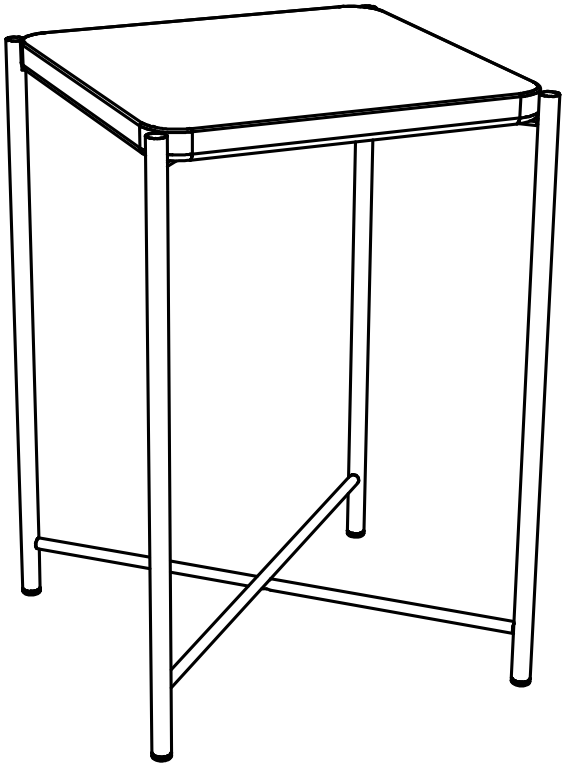

Benötigte Werkzeuge – Outils Nécessaires – Tools Required – Attrezzi Necessari

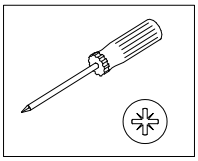

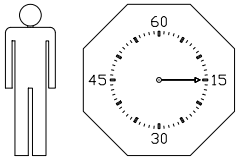

12.05.2026

660.01033

A ×1	B ×1	C ×1	D ×1	E ×1	F ×8
	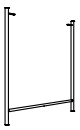	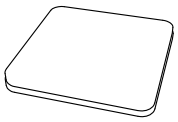	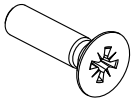	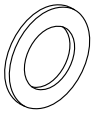	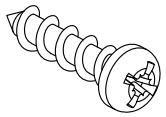
790.405	790.406	1809	631.31500	630.77100	631.80400

1.

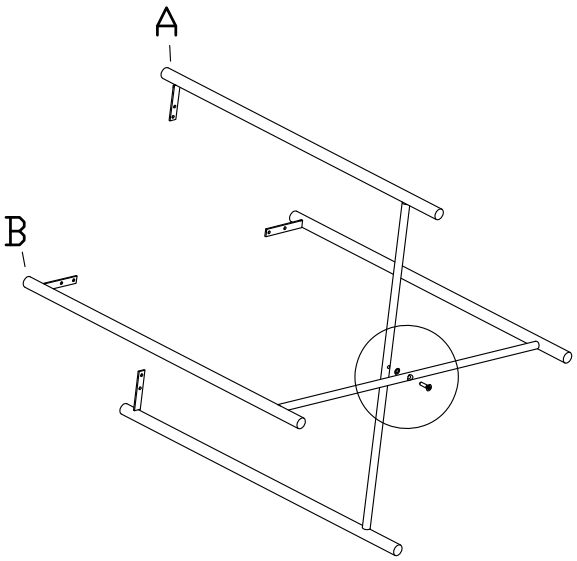

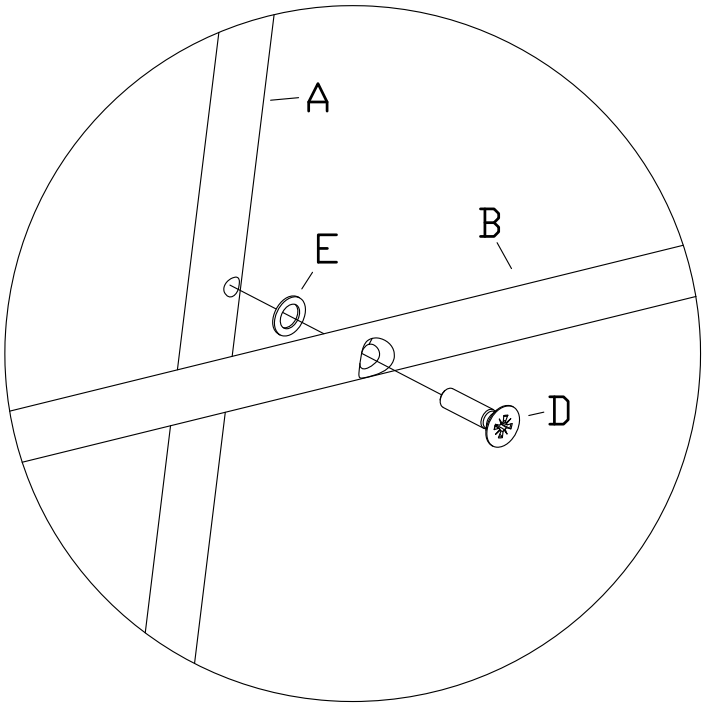

2.

