swiss bed concept

MONTAGEANLEITUNG
NOTICE DE MONTAGE
ASSEMBLY INSTRUCTION
ISTRUZIONE DI MONTAGGIO

HASENA
the dream factory

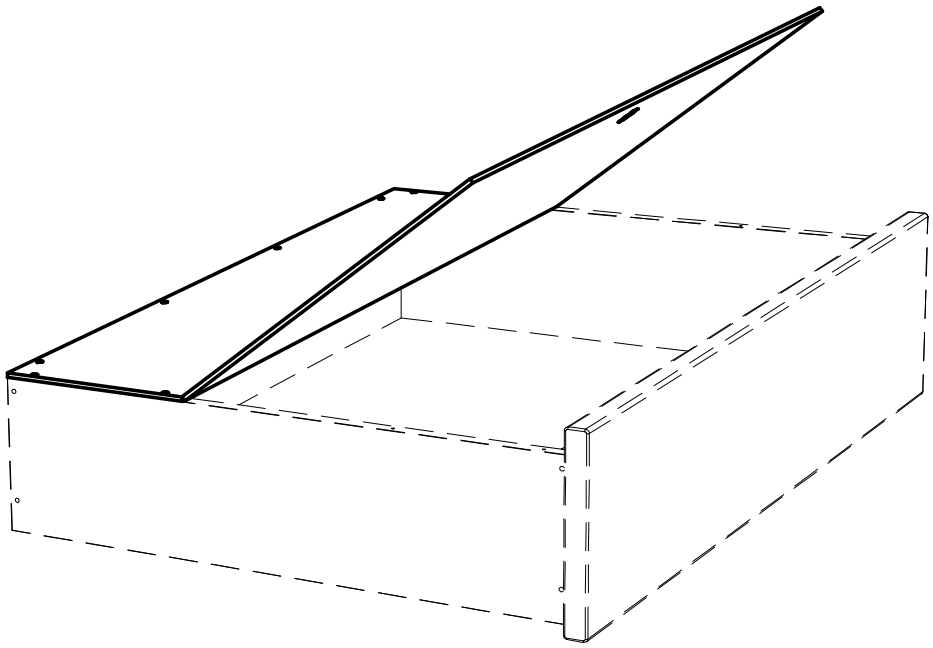

Benötigte Werkzeuge – Outils Nécessaires – Tools Required – Attrezzi Necessari

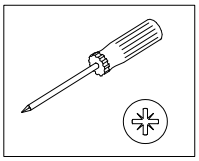

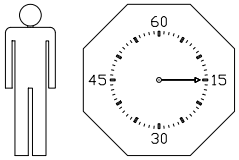

A ×2	B ×16
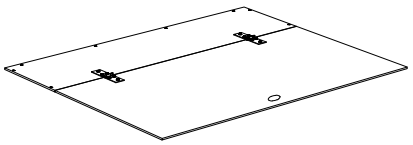 745.298	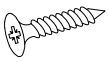 631.30000

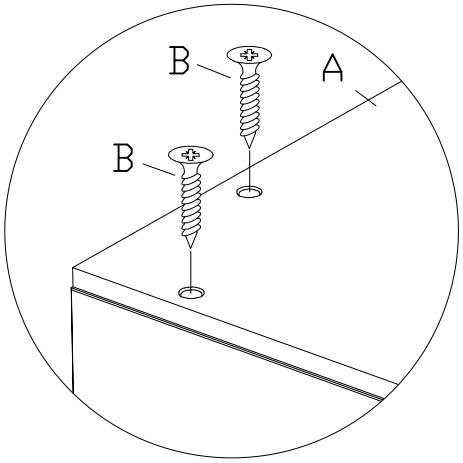

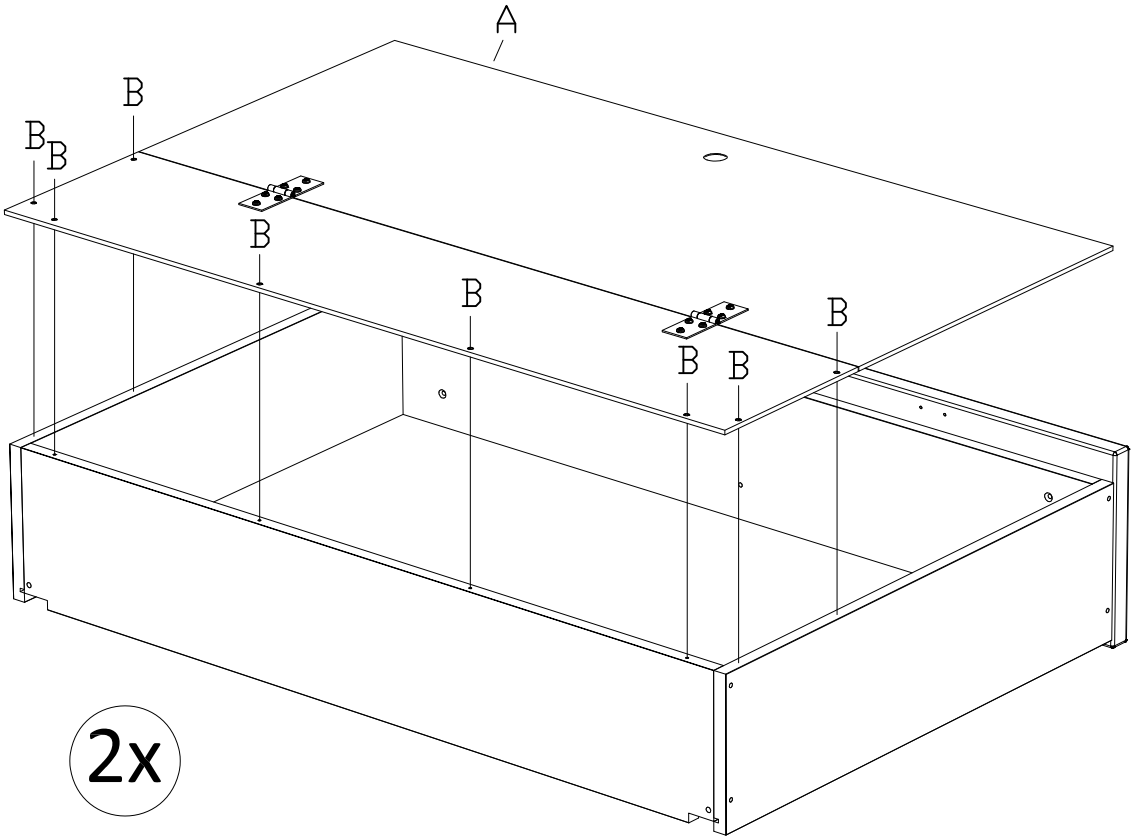

2x