swiss bed concept

MONTAGEANLEITUNG
NOTICE DE MONTAGE
ASSEMBLY INSTRUCTION
ISTRUZIONE DI MONTAGGIO

HASENA
the dream factory

Taliana

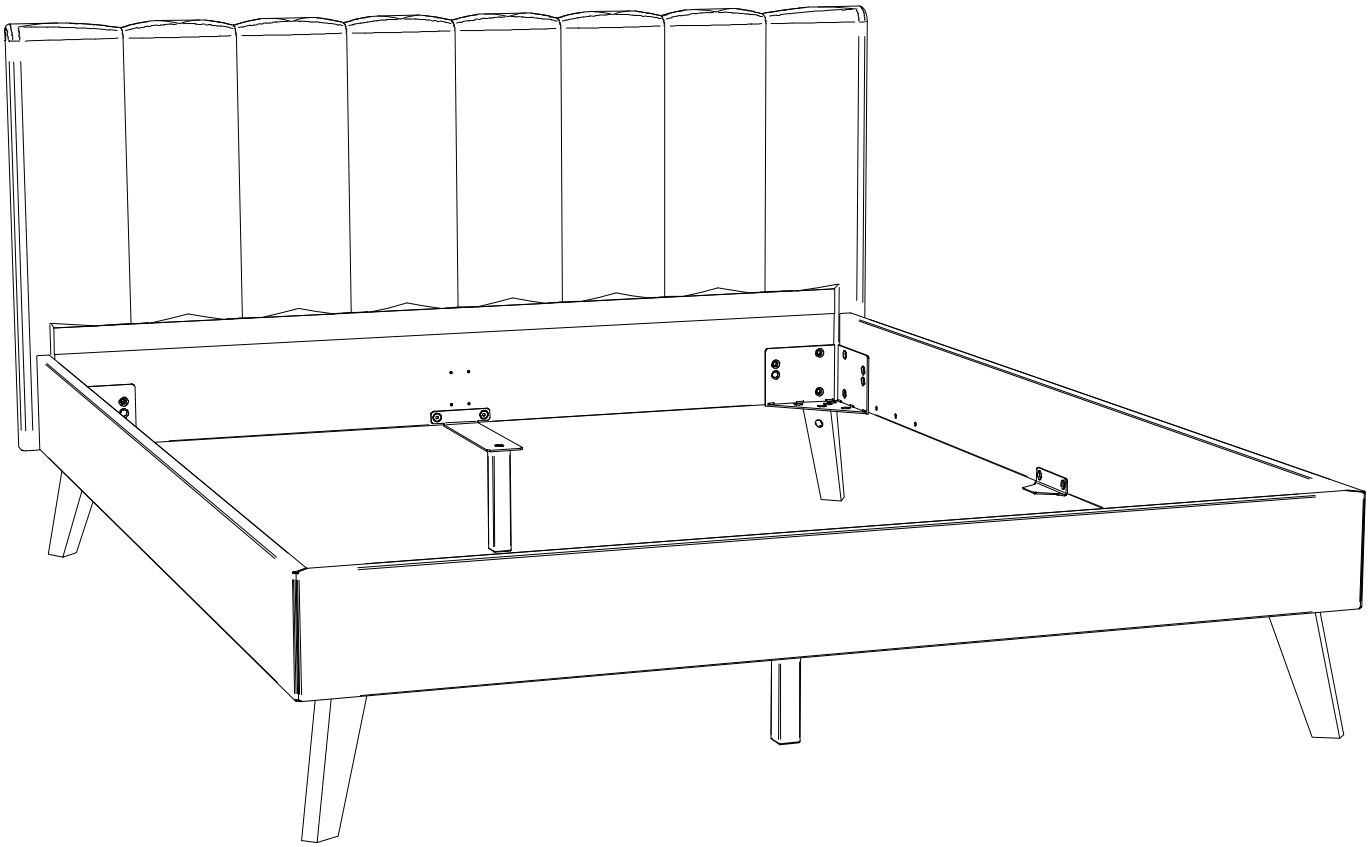

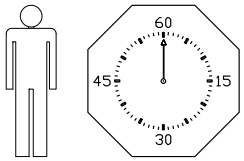

18.05.2026

660.01471

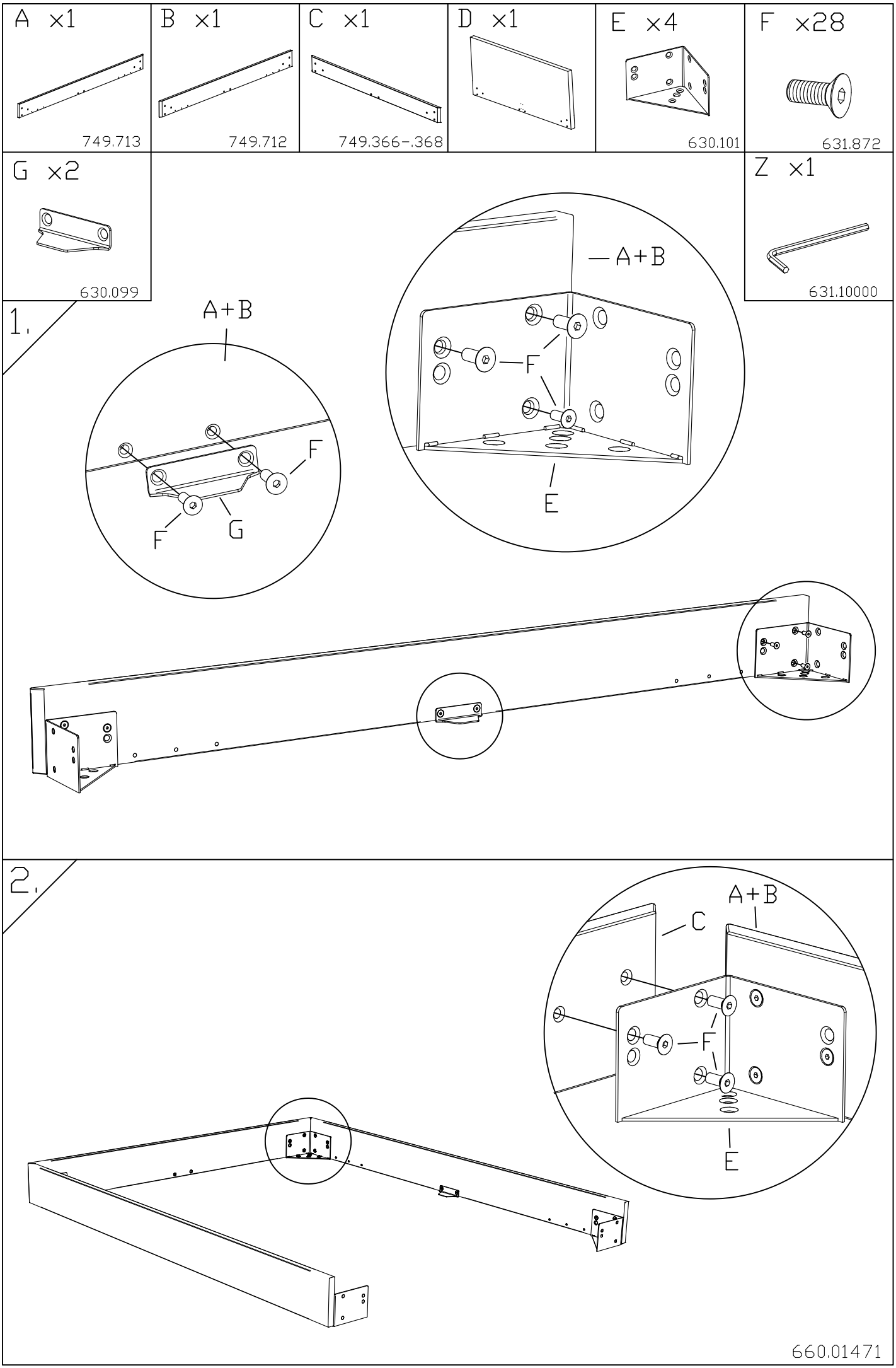
A ×1
749.713
B ×1
749.712
C ×1
749.366-.368
D ×1
E ×4
630.101
F ×28
631.872
G ×2
630.099
Z ×1
631.10000
1.
A+B
F
F
G
A+B
F
E
2.
A+B
C
F
E
660.01471

3.

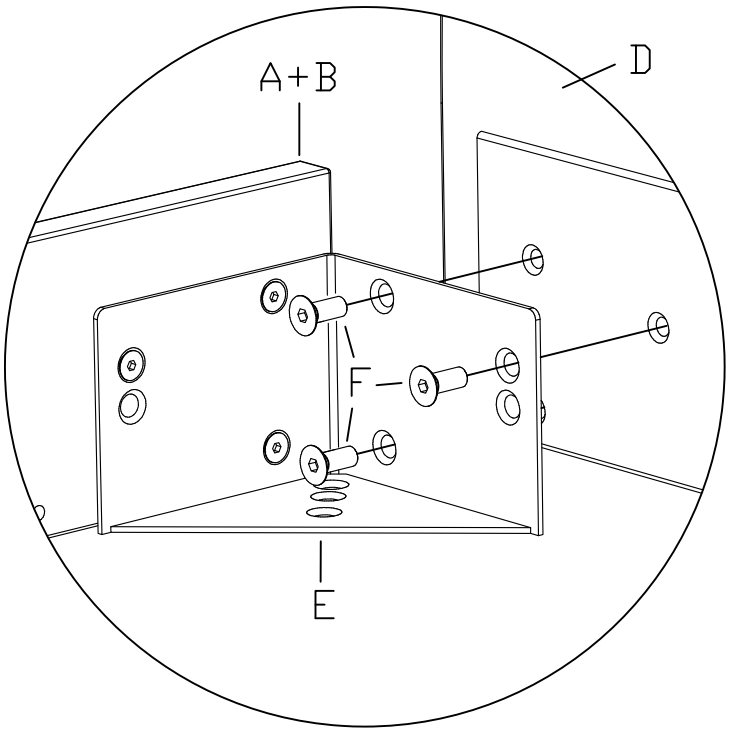

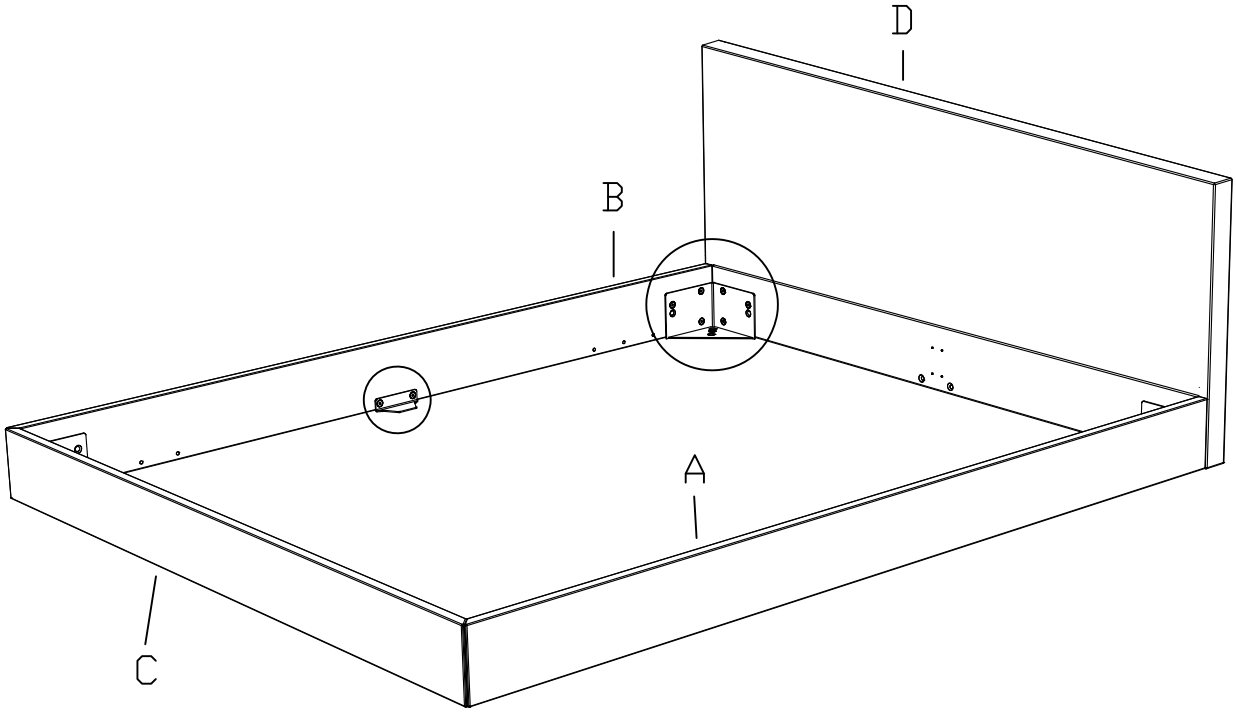

660.01471

H ×4	I ×4 M8×40	K ×4	F ×4 M8×20
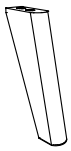	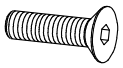 631.877	 631.611	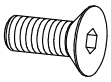 631.872

4.

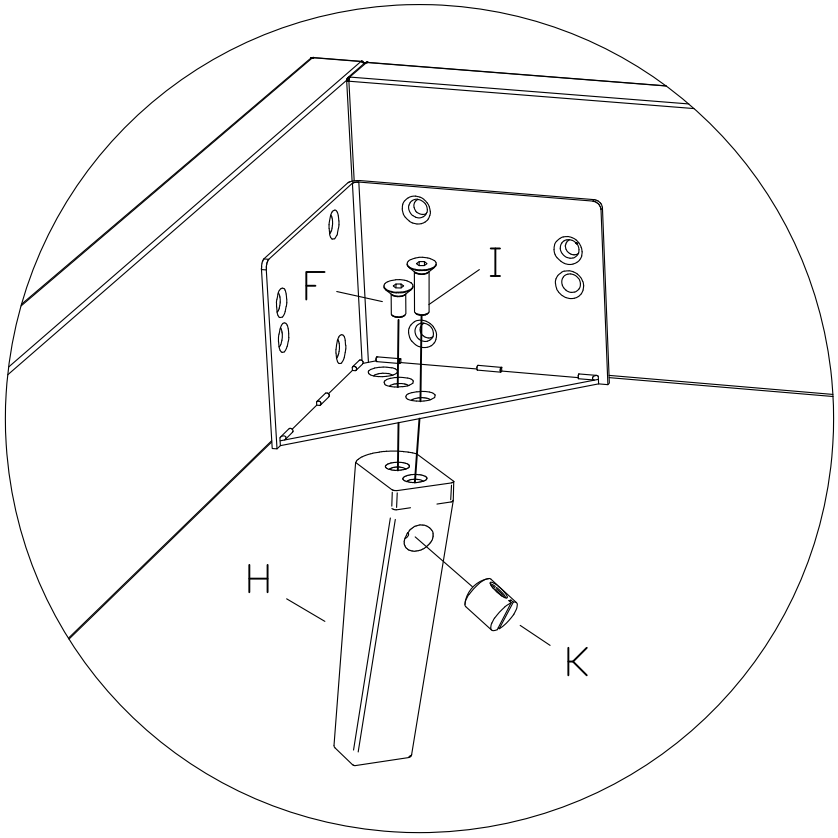

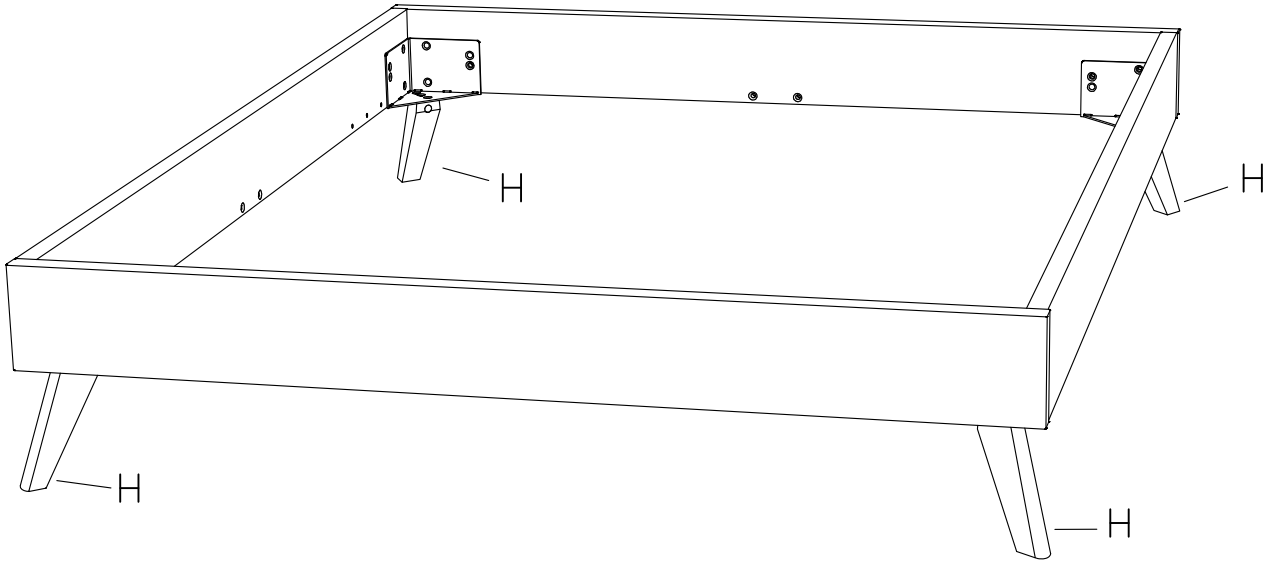

zusätzlich bei Breiten ab 160cm
additional for widths from 160cm
à partir des dimensions 160cm
a partire della misura 160cm

M x2

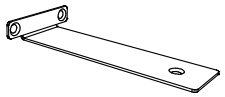

790.023

K x2

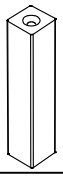

F x6
M8x20

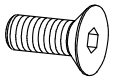

631.872

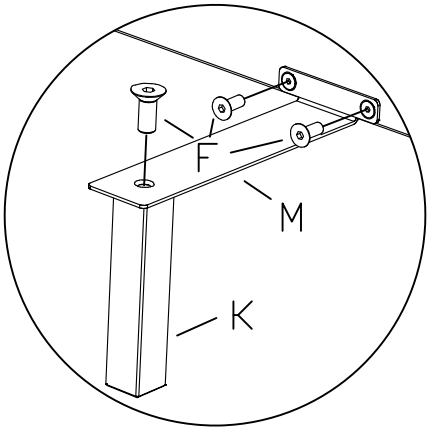

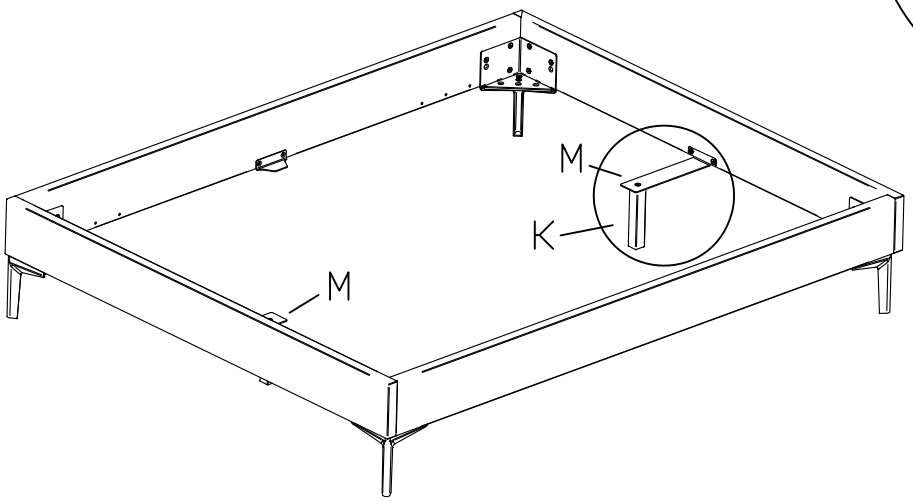

zusätzlich bei Fusshöhe 25
additional for foot height 25
en plus pour le hauteur de pied 25
supporti addizionali per piedi di 25

25cm = 5cm Adapter



793.290

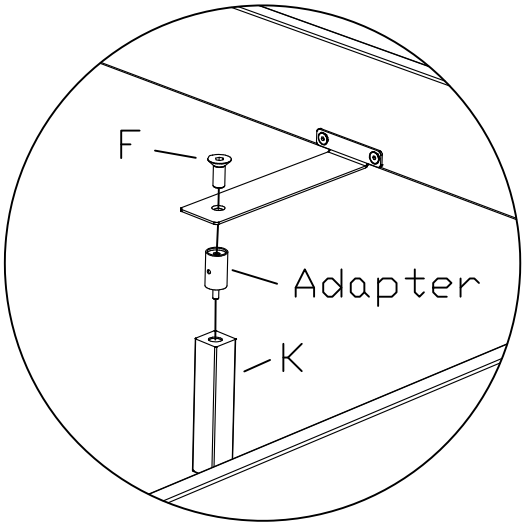

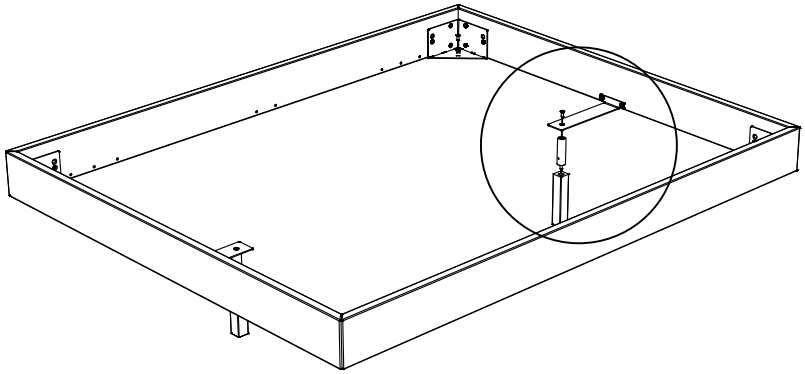

660.01471